AMERICAN ENGINEER AND RAILROAD JOURNAL.

Formerly the RAILROAD AND ENGINEERING JOURNAL.

(ESTABLISHED IN 1832.)

THE OLDEST RAILROAD PAPER IN THE WORLD.

The American Railroad Journal, founded in 1832, was consolidated with Van Nostrand's Engineering Magazine, 1887, forming the Railroad and Engineering Journal, the name of which was changed to the American Engineer and Railroad Journal, January, 1893.

PUBLISHED MONTHLY AT NO. 47 CEDAR STREET, NEW YORK.

M. N. FORNEY, . . . Editor and Proprietor.
FRANK J. FRENCH, . . . Business Manager.

Entered at the Post Office at New York City as Second-Class Mail Matter.

SUBSCRIPTION RATES.

Subscription, per annum, Postage prepaid.....$3 00
Subscription, per annum, Foreign Countries..... 3 50
Single Copies..... 25

Remittances should be made by Express Money-Order, Draft, P. O. Money-Order or Registered Letter.

NEW YORK, DECEMBER, 1893.

EDITORIAL NOTES.

ALL subscribers to the AMERICAN ENGINEER AND RAILROAD JOURNAL should receive with the present number the Index and Title-page for Volume LXVII (Volume VII, New Series). Should any fail to receive it, they can have the omission supplied on notifying this office. The volume covered by this index includes the twelve numbers for the year 1893.

ANY subscribers who may wish to have their volumes for 1893 bound can do so by sending their files to the office, No. 47 Cedar Street, New York, by mail or express, prepaid, and remitting the sum of $1.25. The bound volume will be returned to them, at their expense, without delay.

Should the file be incomplete, the missing number or numbers can be supplied at 25 cents each. The amount required to pay for them should be added to the remittance for binding.

Any special style of binding or any lettering desired may be ordered, for which only the actual extra cost over the regular price will be charged.

AT the annual meeting of the American Society of Mechanical Engineers, which will be held this month, there will be presented the usual large number of papers of more or less practical value, interspersed with the social features for which the Society is so well known, the principal of which is a reception at Sherry's. In another column we give the list of the papers to be presented.

INTERESTED parties are naturally very much delighted over the performance of the cruiser *Columbia* on her trial trip, which occurred on November 18. The speed which the vessel attained and maintained, place her at the head of the list of sea-going vessels, and demonstrates beyond all peradventure the efficiency of the triple screw.

A PROMPT adaptation of one of the latest of American built vessels for use as an armed cruiser is witnessed in the recent sale and re-equipment of the steamer *El Cid* for service in the Brazilian Navy, and demonstrates the advantages to be derived by a country having a large fleet of merchant vessels available for such an emergency. The equipment of the vessel with the dynamite gun is also an interesting feature, whose action will be watched with the most intense interest by the whole civilized world.

CONSIDERABLE interest is being manifested in naval circles just at present over the fact that some of the vessels recently constructed for the Navy have been found to be so top-heavy, that it is necessary to lighten the weights above deck. In the case of the *Detroit*, for example, it is expected that it will be necessary to remove the conning-tower, possibly the ice machine, and probably put from 20 to 30 tons of cement on her bottom. The *Machias* and the *Castine* are in similar circumstances. It would seem to a layman that the ability which enables a constructor to design one of these ships should also lead him to a proper supervision of the calculations of her metacentric height, when ready not only for sea, but when ready to enter port with empty bunkers. We have a dim suspicion, however that when the contracts are let all of the work of the designer is not done, and that the weight of a great deal of the machinery is merely guessed at, and its center of gravity located by a still wilder guess. If such is the case, then there is small reason for wonder that the metacentric height of the vessel should be widely at variance from the calculations.

1894.

IT is usual at the close of an old year for editors to tell their readers what they intend to do during the next annual period which will be covered by the forthcoming volume of their papers. If they have any good things in store for their subscribers these are displayed in attractive typography, somewhat as Christmas presents are now shown in shop windows. The purpose in the two cases is obvious: the shop-keepers want to sell their goods, we want your subscriptions. The latter is the final aim and purpose for which we are editing and publishing a paper, to which the greater part of our thoughts, our time, and our efforts are devoted. It is, of course, desirable for an editor to have some new enterprises to offer to his readers at the beginning of the year. Last December we promised ours to give them a series of articles on English and American Locomotives. These have been completed, and while we expect to have much to say and more valuable information relating to the locomotives not only of America and of England, but of the whole world, than we have ever given them before, it will not be in a serial form, but it will be the latest information which is obtainable from all accessible sources.

The theory, the design, the construction and operation of locomotives have not yet reached a finality. Their defects indicate where improvement is needed, and no evidence has yet been submitted which indicates that those which are distinctly recognized are irremediable. There is hardly a branch of locomotive engineering in which there is not anxious inquiry for improvement. Their organs of combustion perform their functions as unsatisfactorily as the stomachs of dyspeptics or the livers of those who are bilious. Their breathing is often as difficult as that of a consumptive or asthmatic person, and their joints give as much trouble as those of a rheumatic patient, and there are more deposits of calculus in their reservoirs than there are in those of human beings. Their action is often as unbalanced as that of the mind of a human "crank," and they need direction and guidance, like wayward human beings. There is a constant demand, an effort

to improve locomotives, and it will be our aim not only to give the readers of the AMERICAN ENGINEER AND RAILROAD JOURNAL full information of the most recent improvements and the latest data concerning the operation of railroads, but also, by anticipation, to indicate the direction in which improvement is needed and may be looked for.

Compound locomotives we still have with us. Whether they are merely casual visitors, or have come as permanent residents, has, perhaps, not yet been quite definitely decided. In the columns of this paper these visitors will be hospitably received, and if, on further acquaintance, their characteristics entitle them to a permanent residence, they will be welcomed; but if they do not prove to be faithful and useful servants, they will be treated as aliens.

We hope to give much further data similar to that contained in a table published in our November issue, showing the defects in machinery which were the causes of detention of railroad trains. No more profitable investigation can be made by railroad men than to inquire into the nature and extent of such defects, which in so many cases are the causes which precede and produce serious accidents.

Our record of accidents to locomotive engineers and firemen will be continued. Its object is to call the attention of railroad managers especially, and the public generally, to the terrible amount of pain and agony, the suffering and bereavement and the sacrifice of life and limb which goes on daily on our railroads, almost unnoticed and certainly unheeded. We hope to awaken public indignation and to arouse railroad managers to the exertion of some intelligent effort to diminish this sacrifice of life, and the inexpressible torture to which men are often subjected for no other reason than that they have faithfully performed their duties.

It is our purpose during the coming year to give more attention than ever before to the design and construction of cars. We hope to be able to show especially how their weight may be reduced without lessening their strength, how their ventilation, heating, and lighting may be improved. For some thousands of years mankind has been engaged in sitting down, but it has been only within a few years that we have learned how to make proper seats, or one adapted to the human frame. Our efforts at reform in this direction will be continued.

All other kinds of railroad equipment will be discussed, and our chief effort will always be directed to giving our readers the latest information that can be obtained about the design, construction, and operation of all kinds of mechanism used on railroads.

The Contributions to Practical Railroad Information, by DRS. DUDLEY and PEASE, of the testing laboratory of the Pennsylvania Railroad, at Altoona, will be continued. They have been, ever since they were commenced, of increasing interest and value. A prominent railroad officer remarked during the past year that these "contributions" were the most valuable series of articles relating to the practical operation of railroads that have ever appeared in any paper, and—he continued—if railroad managers fully appreciated their value, they would place them in the hands of every subordinate officer who had anything to do with the use, the purchase, or the selection of materials on their lines. We take pleasure in saying that these articles will be continued for the greater part or the whole of next year.

The interesting series of articles on Progress in Flying Machines, by Mr. Octave Chanute, Past President of the Society of Civil Engineers, will be completed in the January number, and will be published in book form as soon as that is possible thereafter. During the past summer an International Conference on Aerial Navigation formed one of the series of "congresses" which were held in Chicago. The meetings of this Conference proved to be successful and interesting beyond expectation. Many papers were submitted and were read and discussed. These were placed at the disposal of the AMERICAN ENGINEER AND RAILROAD JOURNAL for publication. After due consideration it was thought that, as probably only a portion of the readers of that journal would be interested in the subject of aeronautics, it would hardly be fair or wise to devote as much of its space to that subject as would be required to give all of the proceedings at the Conference, or that portion of them which has special value. It was, therefore, concluded to print them as a separate supplement to the AMERICAN ENGINEER, and on October 1 the first number of such a publication was issued with the title AERONAUTICS, and will appear regularly each month for at least one year from that date. As a consequence of the publication of this paper as a separate journal, all matter relating to aeronautics will hereafter appear in it. The AMERICAN ENGINEER and AERONAUTICS will be furnished to subscribers in this country and Canada for $3.50, and in other foreign countries for $4 per year. The price of AERONAUTICS alone will be $1 per year for the United States and Canada, and $1.20 for other foreign countries.

It is thought that the publication of this journal, especially devoted to aerial navigation, will be more satisfactory to both those who are directly interested in this fascinating subject and also to those of the readers of the AMERICAN ENGINEER who are not.

The constantly increasing interest which is felt in the growth of our Navy and its armament will lead us in the future to devote much space to NAVAL CONSTRUCTION AND ORDNANCE. Many of the new ships have already been illustrated and described in its pages, and we will continue to give the latest and fullest information possible, with reference to the growth, the character, the organization, and the construction of the NAVY OF THE UNITED STATES, of which we all hope we may feel a just pride. The ships of foreign nations will receive due attention, and we hope to give in the AMERICAN ENGINEER such information as will lead those who are interested in our Navy to look to its pages for information.

TRAIN DETENTIONS.

To the Editor of the AMERICAN ENGINEER:

IN looking over the Summary of Reports of Detentions to Trains from Defective Machinery, on page 548 of the November issue, I find it both interesting and instructive, and being in tabulated form, very convenient for reference. I notice, however, that you have omitted items which, in my opinion, enter largely into what is termed "train failures," and I would be pleased to learn, if you have the information at hand, the number of trains operated from which you compute the table. Also whether records were kept, if any, of detentions due to boiler defects, such as leaky flues, defective fireboxes, or other boiler failures. I find no mention of these in the report referred to. By supplying this information you will greatly oblige MASTER MECHANIC.

NEW PUBLICATIONS.

THE THEORY AND PRACTICE OF MODERN FRAMED STRUCTURES. Designed for the use of Schools and for Engineers in Professional Practice. By J. B. Johnson, C.E., Professor of Civil Engineering in Washington University; C. W. Bryan, C.E., Engineer of the Edge Moor Bridge Works; and F. E. Turneaure, C.E., Professor of Bridge and Hydraulic Engineering in the University of Wisconsin. New York: John Wiley & Sons, 1893. Cloth, octavo, pp. xi., 527, with 38 plates. Price, $10.

This interesting and important volume is divided into two parts. Part I treats of the computation of stresses and the general theory of bridges. Part II treats of the details of construction and the processes of design, not merely of bridges,

but of trestles, stand pipes, and tall steel and iron buildings. Part I covers 232 pages, and Part II embraces 285 pages with the 38 plates. There are also 451 cuts throughout the text of the two parts.

The book opens with a brief account of the history of the development of American truss bridges, which is followed by six chapters giving the methods of computing stresses. This subject has been so fully treated in numerous other books that few points of novelty can be expected. Both analytical and graphical processes are presented, and the whole seems well adapted to the use of students. An analysis for stresses due to wheel loads by graphical diagrams may be especially mentioned. The discussion of conventional methods of treating train loads, by the use of excess weights and equivalent uniform loads, leads to the conclusion that no satisfactory equivalents can be stated which will give correct stresses for all parts of the truss, and that the actual wheel loads should continue to be used when they are prescribed in the specifications. The chapter on lateral and portal systems gives a fuller treatment than is customary in text-books.

Chapter VIII, on fundamental relations in the theory of beams, sets forth very clearly the conditions which exist when the material is strained beyond the elastic limit, and contains much sound doctrine. For instance, the statement that wrought iron and mild steel beams cannot be said to have any cross-breaking strength, will be novel to many engineers, but its truth must be admitted upon reflection. Next follows a chapter on column formulas, in which Professor Johnson cannot resist the temptation to propose a new one. This is similar in form to the well-known straight-line formula of Thomas H. Johnson, the square of the ratio of length to radius of gyration being used instead of the first power. The number of column formulas now proposed is so great that we think a halt might well be called in this line of progress, and the attention of investigators be more profitably directed to making experiments on columns when stressed within the elastic limit.

The chapter on suspension bridges, though short, deserves notice on account of a new theory regarding the action of stays, the author reaching the conclusions that the maximum unit-stresses in these are independent of their size and are greatest in stays nearest to the towers. In a numerical example this maximum unit-stress is found to be 64,000 lbs. per square inch, a figure sufficiently high to condemn the use of stays altogether, if the theory be true. These alarming conclusions are deduced by means of a principle in statics strange to us—namely, that when a structure contains superfluous members the load divides itself among the systems in proportion to their relative rigidity or inversely as their deflections. No demonstration of this is given, and the statement in a subsequent chapter that it is "nearly self-evident" cannot be accepted. The true principle to be used in this case is, we think, that the total work of all the internal stresses must be a minimum, and its application would probably produce a theory of stays more in accordance with known facts.

To continuous bridges only six pages are devoted, these structures being so little employed in America that it seems unnecessary, in the opinion of the authors, to teach the details of the practice. In the chapter on swing bridges, however, there will be found a good deal regarding the application of the principles of continuity. The five pages devoted to cantilever bridges does not well accord with the 16 given to arches, considering the greater interest and importance of the former class of structure. Chapter XV, on the deflection of framed structures, refutes the erroneous proposition of Stoney regarding the influence of web members, and gives examples showing that the distortion due to the webbing is nearly equal to that due to the chords. We are not prepared, however, to accept the statement that loads placed at the hip verticals have no influence on the deflection at the center of the truss, and, in fact, there are other points in the method which do not seem entirely satisfactory.

Part II opens with an excellent discussion of the conditions which determine the style of structure to be used, and this is followed by two chapters on the design of individual truss members and details of construction. These are controlling factors in building a good bridge, and hence are dwelt upon at length, numerous examples and tables of the Edge Moor standards being given. Then follow six chapters, in which are successively detailed the steps of design for a plate girder, a roof truss, a Pratt truss for a single track railroad, a highway bridge, a Howe truss, and a drawbridge. The designs are completed as far as computations and general plans are concerned, but detailed shop drawings and bills of material are not given, except for the Howe truss. It is, however, safe to say that nothing so thorough, clear, comprehensive, and reliable on bridge design has heretofore ever appeared in print. To students in technical schools, and to many older students in the offices of bridge works, the careful study of these pages will be of great benefit.

On timber and iron trestles, stand pipes and tanks, and tall building and mill construction, there are given many useful details of practice, as well as theoretical discussions. Literature on most of these subjects has heretofore been confined to the pages of periodicals and transactions of engineering societies. The chapter on mill construction is so excellent that we may perhaps overlook the fact that it is here republished for the third or fourth time, but we think that an effort should have been made to improve two almost illegible plates which accompany it. The chapter on æsthetics is a good one, and a move in the right direction which we heartily second; the pictures of European bridges are in general well chosen to illustrate artistic ideas, yet the æsthetic effect of the Wehra Bridge seems to us decidedly negative, while that of the Salzburg Bridge is mostly due to the beautiful castle in the background.

Besides the three authors whose names appear on the title page, chapters or parts of chapters have been written by J. W. Schaub, D. A. Molitor, C. T. Purdy, and G. H. Hutchinson. Appendices on specifications, inspection, and the erection of bridges are also furnished by F. H. Lewis, A. L. Johnson, and F. W. Skinner. Thus the book is the result of the thought and labor of many men, and while it hence lacks perfect unity, it presents subjects in different lights, and is particularly authoritative because each writer treats the topics for which he is best qualified by study and experience.

BOOKS RECEIVED.

Fifth Special Report of the Commissioner of Labor. The Gothenburg System of Liquor Traffic. Prepared under the Direction of Carroll D. Wright, Commissioner of Labor, by E. R. L. Gould, Ph.D. Washington, Government Printing Office. 253 pp., 6 × 9 in.

Sixth Special Report of the Commissioner of Labor. The Phosphate Industry of the United States. Prepared by Carroll D. Wright, Commissioner of Labor. Washington, Government Printing Office. 145 pp., 6 × 9 in.

Consular Reports, October, 1893, Commerce, Manufactures, etc. Washington, Government Printing Office. The reports in this volume, which relate to engineering subjects, are one on Canadian Canals, another on Bridges at Buda-Pesth, and a number of others on Technical Schools in Europe.

Second Report of the Bureau of Mines, 1892. Printed by order of the Legislative Assembly of Ontario.

Report of the Proceedings of the Twenty-seventh Annual Convention of the Master Car-Builders' Association, held at Lakewood, N. Y., June 13, 14, 15, and 16, 1893.

Practical Instructions Relating to the Construction and Use of the Steam Engine Indicator. Published by the Crosby Steam Gauge & Valve Company, Boston, Mass. 95 pp., 7 × 4¼ in.

Standard Tables for Electric Wiremen. By Charles M. Davis. Fourth edition, revised and edited by W. D. Weaver. New York, The W. J. Johnston Company, Limited.

A Field Book for Civil Engineers. By Daniel Carhart, C.E. Boston, Ginn & Co.

La Republique Orientale de l'Uruguay. Histoire Géographie, Mœurs et Coutumes, Commerce et Navigation, Agriculture. By Le Comte de Saint-Foix, Minister Plenipotentiary. Paris, Leopold Cerf, 13 Rue de Medicis.

TRADE CATALOGUES.

J. T. Connelly's Improved Mechanical Devices. Milton, Pa., 28 pp., 6 × 9 in. This pamphlet describes the special tools and appliances for putting in and taking out staybolts, which are manufactured by the publisher. It also describes a new car-axle lubricator and a new design of locomotive boiler.

Illustrated Catalogue and Price List of Engineering, Surveying, and Astronomical Instruments, manufactured by Seelig & Kandler, Chicago, Ill., 105 pp., 6 × 9¼ in. This catalogue describes the various kinds of instruments made and sold by this firm. It is quite fully illustrated, and

contains full descriptions and other data concerning the instruments which the firm has for sale.

THE ADDYSTON PIPE & STEEL COMPANY, Cincinnati, O., 8 pp., 7 × 9¼ in. In this publication are given the weights of cast-iron pipe and standard specials made by this Company. An article from the *Railway Review* on the use of cast-iron culvert pipe is reprinted, and engravings and data concerning sewer and street castings are given. A description of the Addyston reversible road roller completes the work.

THE NEW YORK SAFETY STEAM POWER COMPANY. Catalogue A, Trade List No. 24, Vertical Engines. 51 pp., 7 × 10 in. This Company manufacture a type of small vertical engines which with their boilers are fully illustrated in the book before us. It is also announced that they are prepared to furnish several sizes of tandem compound automatic cut-off engines and Worthington's sectional safety water-tube boilers, all of which are illustrated and described.

THE BRUSH AS A FACTOR IN THE VARIOUS ARTS, with monographs by professional men of note. Issued by John L. Whiting & Son Company, Boston, 52 pp., 6½ × 9½ in.

This volume contains a number of short sketches relating in various ways to the manufacture and use of brushes. It is illustrated by a number of half-tone engravings of very beautiful pictures, presumably painted with the Whiting brushes. Some of the female figures shown are insufficiently clothed, but probably this is not the fault of the brushes.

CATALOGUE OF CAR HEATING APPARATUS. Safety Car Heating and Lighting Company, 160 Broadway, New York, 21 pp., 5½ × 10½ in. This book gives what may be called tabulated statements of the advantages of the system of heating cars, which is described, lists of the fittings used for the different systems, engravings showing the arrangement of pipes, illustrations of the Gibbs steam coupler, and general views of the end of a car and of a locomotive and tender showing the location of pipes, etc. A concise explanation of the principles and the construction of this system of heating would, it is thought, add to the value of the publication.

CATALOGUE OF FITTINGS OF THE PINTSCH SYSTEM OF CAR LIGHTING BY COMPRESSED OIL GAS. The Safety Car Heating & Lighting Company, 160 Broadway, New York, 55 pp., 10¾ × 6¼ in. This pamphlet gives first interior and sectional views, showing the application of the Pintsch system of lighting to a car. These are followed by 25 pages of detailed wood-engravings showing the different parts or fittings used in connection with this system. These illustrations are all very good, and each one is named and numbered. After these 18 full-page half-tone engravings of bracket, roof, end, and side lamps, are given, and the volume ends with sectional views of lamps with instructions for ordering gas equipment for railroad cars. The book is an excellent one of its kind; the engraving, printing, etc., are all of the best.

ARTIFICIAL LIMBS.—A. A. Marks, 701 Broadway, New York, has issued a new catalogue of artificial limbs with a statement by the judges of the Columbian Exhibition, granting him the highest award at Chicago in 1893. The first part of the catalogue is taken up with a full and complete description of the artificial limbs manufactured and their methods of application. It would appear from an examination of the cuts, that no matter what the amputation may be or what the physical circumstances attending it, the artificial limb can be applied in a way that will render walking and working easy. Furthermore, there is a naturalness about the gait of those using the foot that does not betray them to people who are unacquainted with the fact of their deformity, except that there is usually a slight limp, especially where there has been double amputation. We know of one or two instances in which there has been double amputation, and the wearers of these limbs go about with as much apparent ease as persons having their natural limbs, and attract no attention whatever except from the fact that there is a slight limp.

The catalogue gives full directions for measuring the stumps, and they can be fitted without the presence of the patients. There is one statement which will be of great interest to our readers, especially those railroad men who are liable to accidents involving an amputation, and that is that the maker recommends that the artificial limb shall be applied as soon after the healing and recovery as possible, because the stumps immediately after recovery from amputation tend to grow large and flabby, and the joints become inervated and the muscles have a tendency to contract. To counteract these tendencies bandages and massage have been recommended with thorough movement of the joints, to be persisted in until the artificial limb is applied. These limbs have been applied within one month after amputation, but this is usually too soon, a safe rule to govern the matter being as soon as the stump has become healed and the patient able to go about; then the limb may be applied. They specially recommend the use of artificial limbs to children, so that the development may be symmetrical and not one-sided. Numerous instances are given of applications, and the latter portion of the pamphlet is taken up with illustrations of men who are working and carrying on their ordinary vocations with artificial limbs.

MANUAL OF MODERN SURVEYING INSTRUMENTS AND THEIR USES, containing useful information for the civil engineer and surveyor, together with a catalogue and price list of scientific instruments, particularly those of the civil engineer and surveyor. Made by the A. Lentz Company, San Francisco, Cal.

The pages of this book are not numbered, and it would take too much time to count them. They are of a usual size, 6 × 9½ in. It is somewhat more than a trade catalogue. As stated in the preface, "the details of every instrument are carefully enumerated and the functions of every part minutely described, so that the little book really becomes a pocket companion for the engineer."

Part I contains a description of the establishment, showing views of the interior of some of the special tools and machines used.

Part II deals with the manufacture of engineering instruments, their uses, repair, adjustments, etc.

Part III contains a number of professional papers written by well-known men.

Part IV is a price list.

The illustrations are most of them fairly good half-tone engravings. The book is very neatly printed, and a useful reference friend for the engineer.

ALUMINUM DRAWING INSTRUMENTS.—Messrs. Theodore Alteneder & Sons, of Philadelphia, have issued a supplemental sheet to their catalogue, in which they say:

"We occasionally receive inquiries for drawing instruments made of aluminum, and are called upon to answer questions as to the desirability of such instruments. We are now in a position, after years of experiments and tests, to state that instruments of any delicacy, or which have joints or wearing surfaces, made of this metal or any alloy containing it in sufficient quantity to have an appreciable effect upon the weight, are inferior in stiffness and wearing qualities. We do not offer such instruments to our customers, and always advise against their use.

"Pure aluminum is very soft, it possesses no wearing qualities, it is readily bent and cut, and its surface is easily rubbed or worn off, being somewhat like lead in these respects. Alloying it with silver, copper, and various other metals somewhat improves it, but not until the percentage of the latter neutralizes the advantage of light weight claimed for it.

"We do not admit that this is an advantage in drawing instruments, but maintain that our regular make are as light as is consistent with the proper feel and touch in their most efficient manipulation.

"In surveying instruments, which have to be carried in the field, lightness is an important consideration, and aluminum is perhaps used to some advantage, but never for wearing surfaces, working screw threads or bearings, these parts being always made of brass or other hard metal, or bushed. Any attempt, in drawing instruments, to use other metal for the joints, wearing surfaces, nuts, clamps and working screw threads, with aluminum for the larger and more passive parts, would so enlarge the instruments as to defeat the very object in view, and the result would be an inferior instrument at a greatly increased cost.

"The surface of aluminum is so easily abraded that it soils the hands and paper; it has also a greasy, unpleasant feel which becomes very objectionable. The patent joint of our dividers, if made of it, would soon wear loose and could not be tightened because the yoke, from want of stiffness in the metal, would spread even worse than poor quality German silver; the knuckle joints would soon wear loose and the strain on the screws for clamping the lead, needle points, and movable parts would result in the thread wearing out very quickly or stripping.

"In the course of our experiments we have discovered that the addition of a small percentage of aluminum to our present metal makes it whiter and perhaps stronger, and materially improves the surface by causing it to take a higher finish with a little less liability to tarnish.

"We make triangles of aluminum, and can recommend them as being accurate, light, and reliable; to overcome the objectionable feature of soiling the paper, we coat the surface with silver. We also make ruling pen handles of an alloy of aluminum and silver. In both these cases the metal takes the place of wood, and they are the only ones that we have found in which the lightness of the metal could be utilized to any advantage, or in which its use was not a positive detriment."

NOTES AND NEWS.

Telephone Wire.—A new kind of wire for telephone use, having an aluminium-bronze core with a copper-bronze envelope, is being experimented with in Germany. It is said to have a low resistance and great tensile strength.

Japanese Railroads.—The Japanese Government has in hand plans for the construction of 14 new railway lines. At present the railway mileage of the empire is about 1,500 miles, of which 994 belong to various companies. It is proposed that these shall be taken over by the State.

A New Trans-Alpine Tunnel.—Everything is about ready for the beginning of the work upon the Simplon tunnel. The conditions of the contract are that the tunnel, with a single line of rails, shall be ready for traffic in five and one-half years, but it is to be so constructed that it may be widened for a second line in four years more. The cost of the first enterprise is estimated at a little more than £2,000,000. The construction of this road will render the present pass superfluous. The road over this pass is the one which was constructed by Napoleon in the early part of the century at a cost of £720,000.

St. Louis Bay Drawbridge.—One of the latest propositions for spanning St. Louis Bay at Duluth, is that of a bridge with a span of 1,604 ft., 585 ft. of which is taken up for the approach grade on both sides, leaving the bridge proper 1,019 ft. in length. The draw-span is to be 444 ft. less the diameter of the turn-table mechanism. The projected bridge crosses between the points at their nearest limits, which is below the existing railroad bridge.

Electric Railway under Paris.—An underground electric railway from the Bois de Bologne to the Bois de Vincennes, in Paris, is projected. It is to consist of a circular cast-iron tube 20 ft. in diameter and 7 miles long, in which a double track will be laid. Trains of four cars will be run on each track at intervals of two minutes. Stoppages will be at 17 stations, and the distance will be traversed in about 45 minutes. Four thousand H. P. will be used for generating the electricity.

Railway to Victoria Nyanza.—In spite of the representations as to the probable impossibility of the railway to Victoria Nyanza paying a dividend, a report on the survey has been presented to the British Parliament. The estimated length of the railroad is 657 miles, the cost being at an average of $17,000 per mile. The report makes an elaborate estimate as to the probable amount of exports and imports and passenger traffic, and concludes that at the outside the road would be able to nearly pay its working expenses.

Turbine Wheels for Niagara.—The turbine water-wheels which are to be used in the Niagara Falls power plant are constructed with one wheel above the other, each 6½ ft. in diameter and 18 in. high. Between the two there is a huge penstock which is 7½ ft. in diameter, which revolves both wheels simultaneously on a tubular shaft. The upper end of the shaft is connected directly with the dynamos at the top of the pit. The turbines operated in this form are kept balanced by the force of the water feeding them above the bottom step or stool of the shaft, and thus there is no danger of the shaft getting hot and burning out.

Mortar in Frosty Weather.—In a recent issue of *Le Génie Civil* M. Charles Rabut, Engineer of the Western Railway of France, deals with the question of handling mortar in frosty weather. Having tried mixing alcohol and marine salt with the water, he has now finally adopted common soda, which gives good results in reducing the liability of the mortar to freeze. One compound of soda reckoned in its anhydrous state is used per gallon of the water with which the mortar is mixed, and the increased cost due to its use is said to be about 37 cents per cubic yard of masonry, an amount which is often small when compared with the saving effected by avoiding a stoppage of work. The use of the soda causes efflorescence in the walls of the building, but the white blotches thus arising disappear after some months.

Kenka-Hebler Projectiles.—Further data has recently been received from Germany regarding the Kenka-Hebler tubular projectiles. The new data is obtained from bullets fired from a 5-mm. Hebler rifle. The ballastic data for various distances are as follows:

Distance, yards.	V. f. s. feet.	P. inches.
0	2,966	33.14
547	2,769	34.45
1,094	2,585	34.78
1,640	2,417	34.12
2,187	2,257	33.14
2,734	2,106	30.84

The penetration in inches is given against deal.

Novelty in Electric Lighting.—A new method of electric lighting is to be tested in a New York building, and instead of arranging the incandescent lamps on one circuit and feeding them continuously from the same source, they are arranged on a number of separate circuits, say, four, and the current is alternately switched from one to the other in regular succession, the idea being that the circuit, having heated each successive circuit of lamps to incandescence, will be returned again to that series before the lamp filaments have time to cool. The means by which this is accomplished is the employment of a special interrupter or rotary cylinder, on which the segments are so arranged that a system of brushes, with which they make contact, carries the current alternately to each series of lamps. The periodicity of the current in this device is about 70 per second.

High Temperature Pyrometers.—At the recent meeting of the British Association Callendar's platinum pyrometer was an exhibit of much technical interest. The difficulty of reading high temperatures, such as that of a furnace, has led to the employment of an electrical method, in which the temperature is determined from the change of electrical resistance of a platinum wire when exposed to the high temperature. Mr. Callendar finds that the law of increase of resistance remains simple and constant for the extremely wide range of temperatures included between the temperature of liquefaction of air and that of a blast furnace. Dr. Müncke, of Berlin, sent some samples of mercury thermometers for high temperatures (up to red heat), the advantage of mercury being its extremely regular expansion, so that the thermometer degrees are all of the same length. To prevent the mercury from boiling it is contained in a tube with carbonic acid gas under a pressure of 20 atmospheres. In the chemical laboratory Messrs. Baird & Tatlock exhibit a thermometer for the same purpose, in which the liquid used is an alloy of potassium and sodium. It can be used up to 600°.

The Automatic Balance of Reciprocating Mechanism.—In a paper on this subject, read before the British Association by Mr. Worby Beaumont, it was pointed out that in most cases of vibration in machinery, whether of rotary or reciprocating forms, the vibration was due to the restriction of the motion which would naturally occur if the nominally stationary parts were free to act under the influence of the disturbing force. To bring about such restriction and to prevent the movement of the stationary parts it was usual to balance the moving parts with care, and in most rotating mechanism this could be done with success. It was, however, very difficult in reciprocating mechanism, and in many cases could not be achieved. Troubles brought about by vibration might be completely avoided, and at the same time the strength, cost, and power hitherto necessary might be all reduced by completely reversing the usual proceeding. The unbalanced motor parts were automatically balanced by setting up as much motion in the thing to be moved as was necessary to absorb the inertia of motion or the momentum of the unbalanced thing in every part of its path. All vibration of the supporting parts is thus avoided, and that which usually sets up vibration is converted into a vibromotor. The paper was illustrated by working models.

Palleograph.—This is the name given to a newly invented German apparatus founded on the principle of so hanging a weight that, in consequence of its inertia, it takes no part, in a given direction, in the tremblings and oscillations of the point to which it is suspended. In a series of experiments with this device, made on board a twin-screw vessel of the German

Navy, it appears that the vertical vibrations always attained their maximum when the horizontal were at their smallest, and *vice versa;* this phenomenon was peculiar to twin-screw vessels only, and is explained by the difference in the number of the revolutions of the two engines and the reaction of the masses of the moving parts. The horizontal direction was exactly the reverse, and the action of the masses of the heaviest moving parts of the engines—the connecting rods and cranks—neutralized each other because they were of equal size and acted in opposite directions. The older passenger steamers had much smaller dimensions, and the engines, as is well known, ran at much smaller speed than those of to-day. The smaller the length of the ship, the greater the number per unit of the time of its vibrations. With the increase of dimensions, the period of the vibrations became steadily longer, while necessarily greater engine power, which was requisite, compelled the increase of the number of revolutions.

Steam from Molten Slag.—An Australian paper claims that an arrangement has been advised by which the waste heat of molten slag can be utilized. The machine used for the purpose consists of a steel shell in the form of an egg-ended receiver, having flattened faces on the top and bottom. Through these flat portions a number of boiler tubes arranged in two rows and tapered are passed and secured to the heads by flanges. The lower or larger end of each tube is closed by means of a cast-iron door manipulated by means of a lever. The upper end is provided with a funnel for convenience in pouring the slag into the tubes. The boiler being filled with water to the required level, the slag is poured into the tubes at once just as it comes from the furnaces. As soon as the tube is filled the first tube is emptied by releasing the lever which holds the door, and a conical cast of the cool slag drops into the truck below. As the tubes are emptied they are refilled with molten slag, and in this manner the work is conducted. It is claimed that at the conclusion of a 72-hour test the boiler was emptied and the tubes and all portions of it were carefully examined. The most minute examinations failed to show the slightest action, and the boiler was filled and tested hydrostatically, an ordeal which it is said to have sustained. There is no report given as to the dimensions of the boiler, the size of the tubes, or the length of time in which the molten slag is allowed to remain in position.

Electrically Controlled Clocks.—Herr F. von Hefner-Alteneck, in the *Electrotechnische Anzeiger*, makes a provisional statement about a system of electric control of clocks which appears likely to solve this much-attempted problem in a satisfactory manner. The main difficulty up to the present has been the necessity for a special wire system, central station, and attendance, the cost of which could not be defrayed by the limited public likely to require a luxury of this sort. Whenever, on the other hand, an enterprise was started with faulty mains and insufficient staff, the system was doomed to fail and to create a prejudice against the principle itself. All these difficulties are avoided by incorporating the control system with the electric light or power installation already existing. This is done by means of a clock invented by Herr von Hefner-Alteneck, which is placed in circuit like an ordinary incandescent lamp. It is kept wound up by the current, at an annual cost not exceeding that of one 16-candle lamp burning for 10 hours—*i.e.*, about 4*d*. In case of interruption of circuit, the clock will go about 12 hours independently of the current. The control is effected once a day by a momentary drop of the circuit potential by about 6 or 10 volts at 5 A.M., which has the effect of pointing all the clocks in the circuit at 5. The effect upon the lamps is inappreciable. The control can be performed by hand in the dynamo room, or automatically through the assistance of an observatory. The General Electric Company of Berlin proposes shortly to embody the system in its enterprises.—*Nature.*

Railways of the United States.—According to the advanced sheets of the report of the Interstate Commerce Commission for the year ending June 30, 1892, there was at that time 171,563.52 miles of railway in the country, of which 3,160.78 miles was constructed during the fiscal year. The total number of locomotives was 33,136; of these 8,848 were passenger, 17,559 freight, and 4,355 switch engines, leaving 2,374 which were unclassified and leased. The total number of cars reported by carriers as their property was 1,215,092; of these 966,998 were in the freight service. The average number of locomotives per hundred miles of line is 20. The average number of passenger cars for the same distance is 18. The average number of cars in the freight service is 708. There was an increase during the year in the number of locomotives and cars fitted with automatic couplers and train brakes. The report shows a total increase in equipment of 27,139, an increase in the equipment fitted with train brakes of 68,537, and an increase in equipment fitted with automatic couplers of 75,299. The capitalization is placed at $10,226,748,144. The total number of passengers carried by the railways during the year was 560,958,211. The ton mileage was 88,241,050,225. The report shows that the number of passengers killed was largely in excess of those killed during the previous year.

The Peruvian Trans-Andean Railway.—The Central Peruvian Railway across the Andes has lately been completed to Oroya, the terminus originally intended, which is 30 miles beyond the summit. Our Consul at Callao, in his latest report, gives some details of this remarkable engineering work. It starts from the level of the sea at Callao, and crosses the Andes range to Oroya, 136 miles from the coast. At the seventh mile it is 500 ft. above the level of the sea, at the 18th, 1,300 ft., and at the 33d, 2,800 ft. At the 50th mile the elevation is about 6,000 ft., and the ascent upward is steady and rapid until it reaches its highest point at the 106th mile, when the height is 15,665 ft.; in the next 30 miles it descends to 12,178 ft. at Oroya, or nearly 120 ft. in the mile, while the ascent from the sea is an average of 150 ft. per mile. Smelting works have been established in places adjacent to the terminus, where ores from the neighboring districts are reduced to a form suitable for conveyance to the coast and exportation. Oroya is likely to become a place of great commercial importance, and already there is unusual business movement and animation there. The Consul says it is to be hoped that the Government of Peru and the Peruvian corporation may soon find it mutually advantageous to extend the line by Tarma and Chanchamayo to the point at which the fluvial navigation begins, for, when once it has direct and easy communication with the Amaaonian regions and the Atlantic, Peru will be on the high road to prosperity.—*London Times.*

Third Avenue Bridge, New York City.—In compliance with the United States requirements it is probable that there will be a new bridge built across the Harlem River at the upper end of Third Avenue, which will be 24 ft. above the water-line. The proposed bridge is to be a riveted through drawbridge, 300 ft. long and 86 ft. wide, which, it is said, will be the widest swinging bridge yet constructed. The pivot pier of the bridge is to be an annular wall of masonry supported on an annular wooden caisson foundation, which will probably have to be sunk about 45 ft. below main water. The draw is to be built of open-hearth steel. It is to have two railroad tracks, two roadways, and sidewalks on overhung brackets. The roadways of the draw-span will be paved with asphalt. The deck spans will be paved with granite blocks on the corrugated floor, and the sidewalks will be paved with bluestone flags. The operating machinery will be in a machine house over the roadway. Engines and boilers will be in duplicate. The steam plant will be two 10 × 7 in. double-cylinder oscillating engines, and each is separately coupled to a differential gear in proportion of 19 to 1. Each end of the draw will have four hydraulic cylinders for supporting and locking the ends of the draw. There will be two 60-H.P. boilers designed for a working pressure of 100 lbs. The draw will weigh 1,700 tons, and be supported on 96 wheels 12-in. tread and 2 ft. in diameter. The bridge can be revolved through one-quarter of a circle in a minute and a half. It will be lighted by an incandescent electric light plant installed in the engine house near the center of the bridge.

A Ferry Bridge.—A bridge of somewhat novel type has been erected at Portugalete, on the Spanish coast of the Bay of Biscay. According to *Le Genie Civil* it is the joint invention of M. de Palacio, a Spanish architect, and a French engineer, M. Arnodin. The bridge is for the purpose of spanning a large piece of water between Portugalete and Las Arenas. The idea is to enable large masted vessels to pass unimpeded under the span, and yet to avoid any undesirable gradient. The structure consists of a long trellis girder resting upon iron piers, and further supported by a suspension chain fixed in the ordinary manner. Rails are laid upon the girder, along which runs a frame on friction wheels. From this is slung by wire ropes a ferry car. The motive power may be applied in such way as is thought desirable. In any case, with this description of bridge no roadway or flooring is needed. The span at Portugalete is 530 ft., with a headway of 128 ft. If an ordinary bridge had been built with the roadway at the same elevation, an approach half a mile long with a gradient of 1 to 20 would have been required. A small foot-path on each side of the girder or platform allows of the passage of the workman charged with the duty of inspecting and lubricating the rolling apparatus. The working of the bridge has been commenced successfully, and with 150 per-

sons in the car transit of over 500 ft. is accomplished in one minute. The public appear to highly appreciate the convenience and rapidity of the locomotion. When fully loaded the weight of the car is 40 tons, and it is claimed that the principle could be applied to the conveyance of goods, road vehicles, or even railway trains.

Boring to a Depth of 6,560 ft.—The deepest boring of which we have any knowledge up to the present time is at Parvschowitz, in the district of Ribnik in Western Silicia. The depth attained is 6,568 ft., and the diameter of the hole is only 2.75 in. The work has been temporarily stopped in order to lower especial thermometers, which have been made with great accuracy, into the hole for the purpose of obtaining the temperature at different depths. The boring will then be resumed, and it is hoped that a depth of 8,200 ft. will be reached. The method of operation is that the Hammersmann tubes are used, great lengths of which can be operated at once. The first tube has a diameter of 11.8 in., and is provided at its lower end with a diamond cutting edge which acts as a drill. The pipe is then screwed, as it were, into the ground, and when it has been entered completely a small special mechanism permits the cutting off of the column of *débris* at the base, whence the core which has been formed in the interior of the tube, and which exactly represents the geological formation, is removed. This is then raised to the surface of the ground and the diamond-pointed cutting edge is raised to the surface and a second and longer tube screwed on, having as its outside diameter the inside diameter of the first one, and it is also provided, on its lower extremities, with a new diamond-pointed cutter. This tube is then dropped into the hole, it is stopped by the first boring, and they begin to screw it down as in the case of the first. When the two tubes are thoroughly imbedded in the ground, the first operation is repeated and the core withdrawn, and thus by successively screwing on to the end of the tube one whose external diameter is equal to the internal diameter of the preceding one, the work is carried on. —*Revue Scientifique.*

Test of Rapid-Fire Guns.—Considerable interest is manifested in the coming international test at Sandy Hook of rapid-fire guns. These, it is now said, will be conducted by a Board of Ordnance officers detailed by Brigadier-General D. W. Flagler, the Chief of Ordnance of the United States Army.

The test of 6-pdr. rapid-fire guns will be supplemented, it is announced, by a test of 4.7-in. rapid-fire guns open to the world.

It is learned that 4.7-in. guns will be submitted by Hotchkiss, Armstrong, Canet, Krupp, Maxim-Nordenfeldt, and Schneider et Cie. The Hotchkiss gun is the only American weapon in the lot, and the Hotchkiss gun which is to be tried is the manufacture of the Hotchkiss shops outside of Paris.

The Canet gun is of French make. That which is to be submitted represents the type now in general use aboard the most modern ships of the French Navy. The Krupp 4.7-in. gun will be of the latest type that is employed in the German Navy.

The Maxim-Nordenfeldt gun is of American-English design, Maxim being an American and Nordenfeldt an Englishman. Maxim-Nordenfeldt guns are fabricated exclusively at present in England.

The gun to be submitted by Schneider et Cie is French both in design and in manufacture. The majority of the guns to be tried will be tested on naval carriages. The army test will comprise rapidity of fire, velocity, penetration, ease of manipulation, and accuracy. The Sandy Hook authorities will endeavor to determine which gun is capable of imparting to its projectile the highest velocity on the least chamber pressure, and at the same time admit of great rapidity of fire with the least possible exertion in manipulating the piece.

The London Tower.—A tower, which it is intended shall eclipse that of the Eiffel at Paris by 175 ft., is to be built in the suburbs of London. There will be three platforms to the tower, at intervening altitudes of 150 ft., 500 ft., and 950 ft. respectively. The area of the first will be about 200 ft. square, and it will be covered by a concert hall, shops, restaurants, and side shows of various kinds. There will be like erections on the second platform, but on a lesser scale, and on the third a post-office with telephonic communication will be the leading feature. If the amount of business transacted on the highest stage of the Eiffel Tower be any criterion, the Postmaster General will have no cause to complain of an unremunerative branch, while the patriotism of its patrons will be gratified by the circumstance that this stage is to be 40 ft. higher than the loftiest which the Parisian erection can boast. Crowning all will be an electric lamp of extraordinary illuminating power. The entire tower will weigh about 7,500 tons, and each of its colossal legs will stand on a solid rock of concrete, already in position and imbedded to the depth of 75 ft. This weight is much lighter than that of the Eiffel Tower, but Sir Benjamin Baker, who built the great Forth Bridge, is superintending the work, and may be safely trusted to make the structure perfectly strong and safe. The four legs are already a third of the way up to the first platform. They stand at the corners of a square of 300 ft. base, within which four elevators will work, and will be able, if required, to carry as many as 60,000 persons in a day. The tower will be entirely of steel. The first platform is under contract to be finished by November of this year, but no date has been fixed for the execution of the entire work, though that consummation may possibly be witnessed by the end of 1894.

Railroads in Siam.—The British Consul-General at Bangkok in his last report mentions that much progress was made in the construction of the Bangkok-Korat Railroad during 1892, and the first sod was cut by the King of Siam on March 9. The line is 165 miles in length. It is to be equipped as a first-class line; gauge, 4 ft. 8½ in.; weight of rails, 50 lbs. per yard. There are to be 183 bridges with abutments and piers of brick masonry, and superstructure of steel. They are generally of small size, crossing the numerous canals of the Menam delta, the broadest measuring only 180 ft. The total tonnage of rails and fastenings required is 15,000 tons, and of this 11,553 tons were imported during the year. Rails are being laid at three different parts of the line. The sleepers, of which 30,000 have been delivered during the year, are of an excellent hard wood, found in abundance in the west of Siam. The laborers for the earthworks are chiefly Chinese, and about 40 miles of this work has been completed during the year. The number of Chinese employed is about 2,000. The majority seek the work voluntarily, and are paid by the task. Siamese, both men and women, are employed. The contract time of completing the work is five years, but it is expected that portions of the line will be open for traffic before the end of that time. The meter gauge line from Bangkok to Packnam, at the mouth of the river, a distance of 14 miles, has been completed, and was formally opened on April 11 this year. The capital of the company amounts to $165,000, and of this half has been subscribed by the king. The rails are English and the locomotives and carriages German. This little pioneer line of Siam has started successfully. The Siamese take readily to this form of locomotion, and large receipts are being made from pleasure-seekers, who take trips to Packnam to enjoy the novelty of traveling by steam. The projected line across the Malay Peninsula has now been surveyed, and it is expected that the syndicate will soon begin on the Kedah side.

Electrical Power in Switzerland.—The United States Consul in Chemnitz says:

"It used to be urged that Switzerland's water supply, if properly utilized for obtaining electricity, would reduce very considerably her cost of production. Not only has she many streams, but they fall from such heights that even rivers of small volume have great power. 'Millions of horse power are going to waste in these hills,' was a common expression. 'Switzerland had only to make sluices, put in wheels, lay wires, and get for a "song" what other less-favored nations had to buy with enormous consumption of costly coal,' was what even scientists said only a few years ago. The sluices were laid, dams made, wheels hung, and wires put down. What is the result? Every effort that science could suggest, ingenuity devise, or mechanics arrange was made in different cantons of the little republic to gather electricity by, and transmit it from, her rivers and streams. The latest reports show that if Switzerland, or any country with streams and climate like hers, is to win her way into the world's markets and take a place in the front ranks, it must be by some better method than the use of electricity gained and transmitted from rivers and waterfalls.

"The following table, just published in Chemnitz, shows what 50, 300 and 500 H.P. costs in England, Germany, Bohemia and Switzerland per annum:

Country.	50 H.P.	300 H.P.	500 H.P.
England	$24.24	$12.58	$9.88
Germany	29.21	15.52	13.51
Bohemia	27.50	14.74	12.97
Switzerland	46.82	29.61	25 54

"Compared with the above, the cost of the same amounts of H.P. of electricity transmitted 3.1068 miles (5 kilometers) in an air line in Switzerland, according to results published in connection with the foregoing table, is as follows: Fifty H.P., $30.88; 300 H.P., $16.98; 500 H.P., $12.54. But to this must

be added the transmission cost, which will make the total as follows: Fifty H.P., $57.68; 300 H.P., $31.27; 500 H.P., $25.48.

"How, at these rates, is it possible to turn from steam to electricity? How is it possible for a people using so uncertain and expensive a power to compete with England, Bohemia, Belgium, or Germany? It is only by building a big plant, 500 H.P. at the very least, that electricity begins to show any profit that would commend it as a substitute for steam. It is only then that its prices sink to those of the same amount of power yielded by its rival. The 50 and 300 H. P. gained by steam, even in Switzerland, come cheaper than the same amounts of electric power produced and transmitted from the rivers. These facts may be disappointing, but there they are—the results of experiments.

"Just now the experiments being made in Switzerland are of vital interest to us whose mental efforts, if not practical experiments, are bending toward a utilization of the Niagara, Mississippi, Merrimac, and other streams for the purpose of supplying electrical power to the mills andshops of the United States."

A Cheap Condenser for Exhaust Steam.—In a letter to a contributor of the AMERICAN ENGINEER, Mr. F. H. Wenham, of London, describes a method of condensing the exhaust steam from a high-pressure engine, which is new to us, and probably will be to most of our readers. It is capable of a very extended application, and in many cases would be very useful. Mr. Wenham says:

"There was another odd occurrence in relation to my shop engine: Though I had to burn anthracite or smokeless coal, yet the exhaust steam going up the chimney caused particles of iron to descend in the dew from the steam onto linen hung out to dry in a laundry next door. For this I was threatened with an injunction and damages. I therefore had to take immediate steps to get rid of the exhaust steam. Water was scarce and expensive, so I turned the steam into a disused rain-water well as a temporary expedient; this got rid of it for several days, till the ground got dry and hot; then the steam finally escaped up through the five holes in a stone sink in the corner of the building. Above this was a 5-in. wooden spout reaching to the roof; up this the steam was drawn by a strong draft, but I noticed that none came out at the top. It was all condensed, and fell as a shower out of the open bottom of the spout, and drained back into the sink; and as the wood was scarcely warm, I saw that external or surface condensation had nothing to do with the result: it was simply the rush of cold air mixing with the steam that condensed it. I then at once carried the suction pipe of my feed-pump to the bottom of the tank, and so for years fed my boiler with hot distilled water, very little extra being required to make up waste. The consequence was that my boiler was kept free from incrustation Several engines that I afterward erected were provided with this inexpensive arrangement, using ordinary stoneware pipes to the top of the building, of course leaving the bottom open for the free ingress of air. The arrangement cost but little, and never caused any trouble. About 16 cub. ft. of air will be required to condense 1 cub. ft. of steam.

The Giffard Gun.—About three years ago we noticed a new gun in which the medium of propulsion was liquefied carbolic acid gas. This was the invention of M. Paul Giffard, whose name has long been known in connection with the injector for steam boilers. The gun then introduced into this country was of the original French pattern, but since that time it has been much altered and simplified in detail and construction, the principle, however, remaining the same. The new gun is 3 ft. 9 in. in length with a hexagonal barrel, having a .295 in. bore, and weighing 6 lbs. The liquefied gas is contained at a pressure of 2 tons per square inch in a steel tubular reservoir 9 in. in length, fixed under, and in a line with the barrel of the gun, the combination producing a very handy and well-balanced weapon. In charging the gun a lever which forms the trigger guard is lowered; this opens a chamber for the insertion of a conical bullet, cocks the gun, moves an indicator which shows the charges expended, and places the gun at "safe." When the lever is returned to its normal position the bullet chamber is closed, and the bullet placed in line with the barrel. The safety catch is released by the thumb, and when the trigger is pulled the tumbler strikes a discharging pin. This actuates the valve of the reservoir, which it momentarily opens, causing the omission of a charge of gas. The gas expands in the bullet chamber, and drives the projectile before it through the barrel. It is claimed for this gun that it is practically noiseless and entirely smokeless; has little or no recoil, and does not foul. That it possesses these and other advantages was demonstrated at a series of trials which took place at some improvised shooting-galleries in Queen's Road, Nottingham. In addition to the good qualities already indicated, the gun was shown to possess those of accuracy and penetration. It is being manufactured by the Giffard Gun & Ordnance Company of Copthall House, Copthall Avenue, London.

Coaling Vessels at Sea.—The test of transferring coal from one vessel to another, which was alluded to in our last issue, was conducted by the Navy Department in the following way: It consisted of the transferring of a ton of sand put up in bags of 200 lbs. each from the *Kearsarge* to the *San Francisco*, while the latter was towing the former at the rate of about 1 knot an hour outside Sandy Hook, the ships being 250 ft. apart. On the forward deck of the *Kearsarge* two spars 50 ft. high were erected and firmly lashed to the fore-yard. These were guide-poles for the heavy counterpoise weight. From the weight a wire rope was run up to the top of the poles and passed through a block and run down to the stern deck of the *San Francisco*. On this transmission wire the travelers ran, each carrying a single bag of sand. The only object of the counterpoise was to keep the transmission wire taut. The starting-place was about level with the fore-top of the *Kearsarge* and was some 36 ft. higher than the receiving deck of the *San Francisco*, so that the travelers and their load ran down by the force of gravity. A switch at the end dropped them on the deck, whence they were removed by hand. The bags were raised to their starting-place in the car traveling on an oblique stay, which reached to the *Kearsarge's* deck. The test was thoroughly successful. Ten bags were transferred to the *San Francisco* in 20 minutes. The apparatus worked without a hitch. The rate was slow, only three tons an hour, but speed can easily be doubled, if not quadrupled.

AMERICAN AND ENGLISH LOCOMOTIVES.

(*Continued from page* 516.)

SPECIFICATION OF AMERICAN LOCOMOTIVE.

SCHENECTADY LOCOMOTIVE WORKS,
SCHENECTADY, N. Y., January 5, 1893.

SPECIFICATION No. —— of an eight-wheel passenger locomotive engine for New York Central & Hudson River Railroad.

GENERAL DESCRIPTION.

Gauge, 4 ft. 8½ in.; fuel, bituminous coal; cylinders, 19 in. in diameter, 24 in. stroke; drivers, 84 in. in diameter; driving-wheel-base, 8 ft. 6 in.; total wheel-base, 23 ft. 11 in.; weight in working order, on drivers, about 82,200 lbs.; total, about 123,000 lbs.; general design shown by photograph of Engine No. 897, New York Central & Hudson River Railroad.

BOILER.

To be of the best workmanship and material, to be capable of carrying with safety a working pressure of 180 lbs. per square inch, and of sufficient capacity to supply steam economically. All horizontal seams with butt joints quadruple-riveted with welt strips inside and outside. A double-riveted seam uniting waist with fire-box. All plates planed at edges and calked with round-pointed tool. Boiler to have extended front end.

Waist, dome, and outside of fire-box of steel, $\frac{1}{2}$ in. $\times \frac{9}{16}$ in. thick; throat, $\frac{5}{8}$ in. thick; diameter of waist at front end, 58 in.; made wagon top, with 1 dome 30 in. in diameter placed on wagon top.

FIRE-BOX.

Of best quality of fire-box steel, $96\frac{3}{16}$ in. long, $40\frac{7}{8}$ in. wide; front, $70\frac{1}{2}$ in. deep; back, $58\frac{1}{2}$ in. deep; crown sheet, $\frac{5}{8}$ in.; tube sheet, $\frac{1}{2}$ in.; side and back sheets, $\frac{5}{16}$ in. thick; water space, 4 in. front, 3 in. sides, 3 in. back. All sheets thoroughly annealed after flanging. Fire-box ring double riveted. Stay-bolts $\frac{7}{8}$ in and 1 in. in diameter, screwed and riveted to sheets, and placed not over 4 in. from center to center.

Crown sheet supported by crown bars made of two pieces of wrought iron 5 in. wide, $\frac{3}{8}$ in. thick, placed not over $4\frac{1}{2}$ in. apart, reaching across crown and resting on edge of side sheets. Crown bars riveted to crown sheets with $\frac{1}{2}$ in. rivets placed not over 4 in. from center to center, each bar having 4 stay-braces to top of boiler or dome.

TUBES.

Of charcoal iron No. 11 W. G., 268 in number, 2 in. in diameter, 12 ft. in length, set with copper ferrules at both

ends, swedged at back end, and beaded both ends. Cleaning-holes at corners of fire-box, and blow-off cock in throat.

GRATE.

Grates, rocking.

STACK.

Smoke-stack, straight; deflecting plate and netting in smoke-box.

FRAMES.

Of best hammered iron; main frame in one section, with braces welded in. Forward section securely bolted and keyed to main frame. Pedestals protected from wear by cast-iron shoes and wedges, and locked together at bottom by bolt through cast-iron thimble. Width of frame, 4 in.

CYLINDERS.

Of close-grained hard charcoal iron. Cast with half saddle attached, the right and left cylinders from the same pattern and interchangeable. Fitted together in a substantial manner and securely bolted and keyed to frame. Valve face and steam-chest seat raised above face of cylinder to allow for wear. Cylinders oiled from Nathan No. 9 double-sight feed lubricator placed in cab, with copper pipe under boiler lagging to steam-chest.

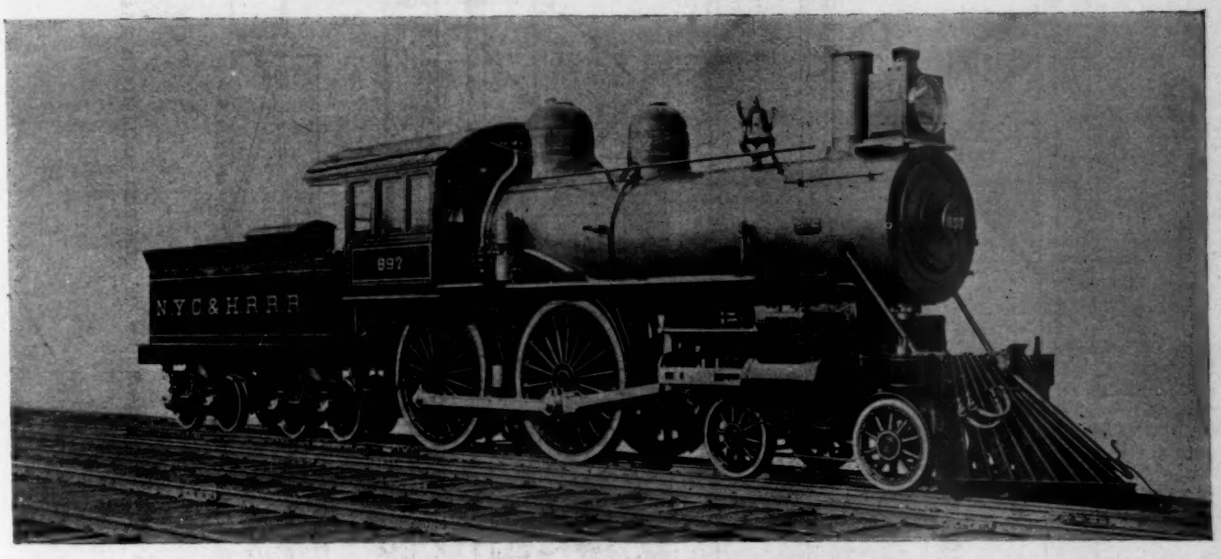

AMERICAN EXPRESS PASSENGER LOCOMOTIVE, BUILT BY THE SCHENECTADY LOCOMOTIVE WORKS.

THROTTLE.

Balanced valve placed in dome, with wrought-iron dry-pipe and cast-iron steam-pipe connecting to cylinders.

PISTONS.

Made with removable follower, and fitted with approved cast-iron steam packing. Piston-rods of hammered iron.

VALVE MOTION.

Approved shifting-link motion graduated to cut off equally at all points of the stroke. Links, sliding blocks, plates, lifting links, pins and eccentric-rod jaws of the best hammered iron, thoroughly case hardened.

GUIDES.

Of hammered iron, case hardened.

VALVES.

Richardson balanced steam-chest valves

PACKING.

United States metallic packing on piston-rods and valve stems.

CROSS-HEADS.

Of cast steel with brass gibs. Style for 4-bar guide, top guides 4 in. wide.

DRIVING-WHEELS.

Four in number, about 84 in. in diameter. Centers cast of the best charcoal iron and turned to 77 in. diameter to receive tire.

TIRE.

Of steel, 3¼ in. thick, both pair flanged 5¼ in. wide. Tire held by retaining rings.

AXLES.

Of hammered iron, with journals 8½ in. in diameter, 10½ in. long. Driving-boxes of Ajax metal, with large oil cellars.

SPRINGS.

Made of the best cast steel, tempered in oil. Secured to a system of equalizing beams to insure the engine riding in the best possible manner. Springs hung underneath the driving-boxes.

RODS.

Connecting and parallel-rods of the best hammered iron, each forged solid, fitted with all necessary straps, keys, bolts, and Ajax metal brasses. Parallel-rods with solid ends, channeled bodies.

CRANK-PINS.

Of hammered iron.

WATER SUPPLY.

To have two "Monitor" injectors; one No. 10 right side and one No. 9 left side, with well-arranged cocks and valves for convenience in working.

ENGINE TRUCK.

With square wrought-iron frame, cast-iron pedestals, and center-bearing suitable for rigid center, with approved arrangement of equalizing beams and springs.

WHEELS.

Four Krupp steel-tired spoke wheels, tire held by retaining rings 36 in. in diameter.

AXLES.

Of hammered iron, with inside journals 6 in. in diameter and 10 in. long. Springs of best cast steel, tempered in oil.

CAB.

Constructed of seasoned ash, substantially built, and secured by joint bolts and corner plates. Furnished with seats and tool boxes for engineer and fireman.

PILOT.

Of wood, strongly braced, and provided with substantial draw-bar.

FINISH.

Boiler lagged with asbestos cement and jacketed with planished iron; secured by planished iron bands. Dome lagged

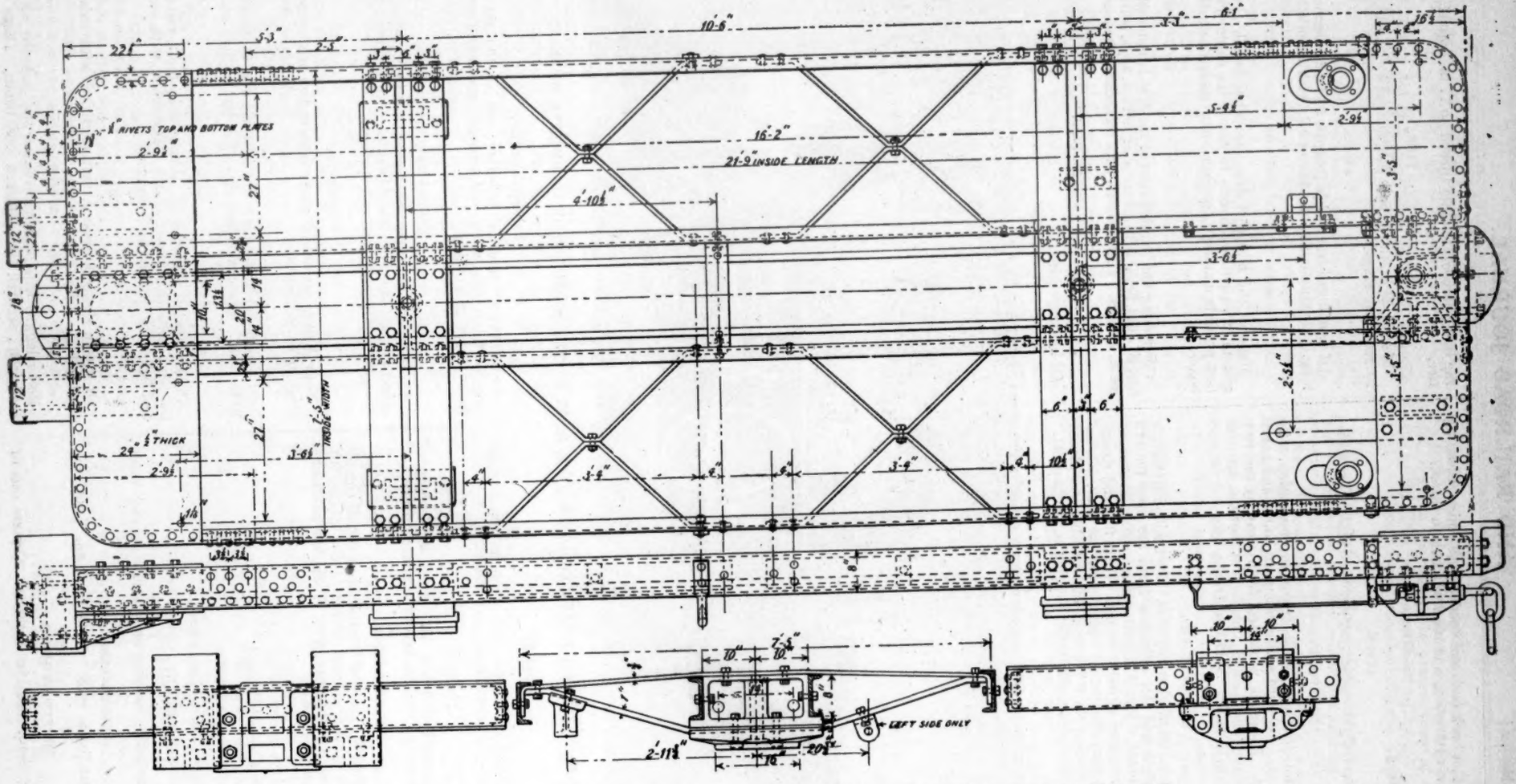

IRON TENDER FRAME, BUILT AT THE READING SHOPS OF THE PHILADELPHIA & READING RAILROAD.

with asbestos cement, with sheet-iron casing and cast-iron rings, painted. Cylinders lagged with wood, with sheet-iron casing and cast-iron head covers, painted. Steam-chests cased with sheet iron, with cast-iron covers, painted. Handrail of iron, painted, with columns secured to boiler.

FIXTURES AND FURNITURE.

Engine provided with sand-box, support for headlight, bell, whistle, Utica steam-gauge, gauge cocks, cab lamp, heater, blower, oil cans, torch, also all necessary wrenches, fire tools, hammers, chisels, packing tools, etc. Two jack screws and a pinch-bar. One 23-in. Williams side-illuminated headlight. Principal parts of engine fitted to gauges and templates, and interchangeable. One 8-in. cab gong. All finished removable nuts case hardened. One water-gauge lamp. All threads United States standard. Smoke-box jacketed with sheet iron and planished iron.

SAFETY VALVES.

Two 3-in. Richardson muffled valves set at 183 lbs. and 185 lbs.

TENDER FRAME.

Substantially built of 6½ in. × 4½ in. angle iron, and thoroughly braced. Back end fitted with "Gould" coupler.

TRUCKS.

Two four wheeled side-bearing trucks, made with wrought-iron side bars and wood bolsters.

SPRINGS.

Made of the best cast steel, tempered in oil.

WHEELS.

Krupp steel-tired plate wheels, tire held by retaining rings 36 in. in diameter.

AXLES.

Of hammered iron, with outside journals 4½ in. in diameter and 8 in. long. Brake on front truck only.

TANK.

Of 3,500 galls. capacity, strongly put together with angle-iron corners, and thoroughly braced and stayed, and well secured to tender frame. Tank fitted with water scoop.

PAINTING.

Engine and tender to be well painted and varnished, with the road, number, mark and name put on in handsome style.

PATENTS.

All patent fees not covered by this specification excepted.

BRAKE.

Westinghouse automatic air brake on drivers, tender, and for train, with engineer's air signal. Ross-Meehan driver brake shoes.

HEATING SURFACE.

Tubes, 1,672.1 sq. ft.; fire-box, 147.7 sq. ft.; total, 1,819.8 sq. ft.

GRATE SURFACE.

Twenty-seven and three-tenths square feet.

The specification for the English engine will be published in the January issue.

(TO BE CONTINUED.)

IRON TENDER FRAME, PHILADELPHIA & READING RAILROAD.

EVERY one who has had to do with railroad rolling stock, especially with that pertaining to the locomotive department, is familiar with the discussions which have arisen from time to time regarding the relative merits of the iron and the wooden tender frames. The advocates of the latter base their arguments upon the fact that, in case of an accident, such as a derailment or collision, when one of the sills of the wooden frame is broken, it is very readily and cheaply replaced without the necessity of tearing the whole frame to pieces. They claim, on the other hand, that with the iron frame, in case of such accidents, it is certain to be bent to a greater or less extent, and that, owing to the weight of the metal of which it is composed, it is necessary to remove the sill or the part bent and take it to the blacksmith shop for heating in order that it may be brought back into alignment. This latter claim is undoubtedly true in regard to many tender frames which have been put under tanks. It is one of those cases where the theoretical calculations in regard to the weight to be carried and the strain to which the parts will be subjected do not at all coincide with the actual requirements of the case. The jarring of the load in running over a rough track, or the pounding which a frame is apt to receive should a wheel leave the rails, is apt to be very much in excess of what was usually allowed in the theoretical calculation of strains, just as we find the truck bolster of freight cars coming down and allowing the car bodies to ride upon the side bearings, although the calculations and tests which have been made of the bolsters would seem to show that an ample factor of safety had been allowed.

A similar experience to this has obtained on the Philadelphia & Reading Railroad with a number of tender frames which they have built. The depth of the channel bars forming the sills has heretofore been 6 in., and this depth has shown itself to be insufficient for the work which is to be performed under the large tanks which are used as tenders for their heavy freight engines. In order to overcome the difficulty of bending and to render the frame stiff against all ordinary and extraordinary shocks short of an actual collision, the tender frame which we show in the accompanying full-page engravings has been designed. The depth of the channel bars forming the sills has been increased to a depth of 8 in., and instead of bolting the corners with angle irons or making a short bend and using an extra piece for an end sill, the outside sills have been rounded out with a radius of 9 in. for the outside of the curve, and the two ends are butted together on the center line of the frame. Here they are held in position by heavy castings, as shown by the engravings. There is one which takes the draw-pin and lays inside of the frame, bolting to the two inside sills, and on the outside there is the heavy buffing casting, so that any buffing strains which may be brought to bear on the frame at this point is carried direct to the inside sills, and has no tendency to cause a bending strain on what practically becomes the end sill of the frame.

In addition to the stiffening which is obtained by these two castings, a plate of ½-in. metal is riveted across the end as shown. The body bolsters are made of iron 6 in. wide, using a thickness of ⅝ in. for the extension members and 1 in. thick for the compression.

Another feature of the frame which is well worthy of attention, and from which the designers expect to obtain very good results, is the use of two 1½-in. bolts which extend through from end to end of the frame, bolting the buffing and draw castings in position. It will thus be seen that any strain which is brought to bear by the sudden pulling out of the engine or the jerking of the train on the draw-bars is carried through from the engine to the train, or *vice versa*, by way of these draw-rods, and there is no strain whatever put upon the general body of the frame with this form of what is practically a continuous draw-bar. Although the frame is braced by diagonal braces made of ⅝ × 5½ in. iron, it is evident, from their location and the space which is available for them, that they would not serve to prevent a diagonal distortion of the frame as the result of abnormal strain, and this is one of the troubles which has heretofore been experienced with the iron frame, that if the rivets become loose the frame is apt to become distorted, and with the distortion follows the inevitable weakness. This frame, however, by being so constructed that its general contour is not affected by either buffing or pulling strains, is freed from these inconveniences. It is expected, as we have already said, that it will have a sufficient strength to resist all ordinary strains of derailments and shocks without deformation, and that it will go far toward settling the relative merits of the iron and the wooden frame.

PROTECTING PILES AGAINST THE TEREDO NAVALIS ON THE LOUISVILLE & NASHVILLE RAILROAD.*

BY MICHAEL L. LYNCH.

IN 1880 the Louisville & Nashville Railroad Company acquired control of what is now known as the New Orleans Division of that road, and with this acquired also a large creosoting works, located at West Pascagoula River.

This road crosses a number of bays, bayous, and rivers, all of which are spanned by means of yellow pine creosoted pile trestles, and iron bridges supported by creosoted pile piers. There are 21,407 linear feet of trestle and 6,459 ft. of iron bridges. The most noteworthy structures, so far as the sub-

* Paper read before the American Society of Civil Engineers.

ject of this paper is concerned, are Bay St. Louis and Biloxi Bay trestles, the first of which is about 2 miles long, and consists almost entirely of creosoted yellow pine; that over the second is 6,040 ft. long and consists of 5,850 ft. of creosoted pile trestle. Each of these structures has an iron draw span 190 ft. long. These trestles were built in the years 1878 and 1879, and replaced structures which had been destroyed by the teredo, which in the waters of the Mexican Gulf and its estuaries are extraordinarily destructive on account of the long warm season. An untreated yellow pine pile, 12 or 15 ft. in diameter, would be rendered unsafe for structural purposes in less than six months. In 1871 a serious accident occurred at the Biloxi Bay trestle from this cause, although the piles were only about 10 months old; seven bents went down with a freight train, and it was found that the piles were all eaten off close to the bottom of the water. When first built, the trestle had hardly been completed when it was found that the untreated piles were so badly attacked by the teredo that rebuilding had to be commenced at once. In 1872 resort was had to covering the piles with copper, but the protection was not perfect. For this reason creosote works were built in 1876, at a cost of $60,000. All creosoted structures have been periodically inspected, and the portion below water examined from time to time by divers. It was not, however, until 1886 that it was found the teredo had begun his attack on the creosoted piles. About the same time an inspection of the creosoted piles in the railroad company's wharves at Pensacola, Fla., disclosed a similar condition of affairs, and the question of determining, if possible, on some further means of protecting the creosoted piles against the teredo became a vital one. As a result of investigation and experiment, it was decided to adopt a thin coat of cement mortar or concrete, applied to the outside of the piles from the surface of the mud or sand at the bottom to high water at the top. To accomplish this a shell of wrought iron made of circular form, composed of several sections, each in two segments, and so arranged to be easily separated, was placed around the pile; the shell was clamped together above the water and lowered section by section until it completely surrounded the pile to a short distance below the bottom. A diver placed a pudding of "gumbo clay," enclosed in sacking, between the shell and the pile at the bottom, before the shell was forced down. Where the water was not more than 12 ft. deep, it was pumped out and the mortar or concrete poured in. Where there was more than 12 ft. of water this could not be done, and concrete was passed to the bottom of the shell, through a special galvanized iron pipe, with a funnel or feeder at the top for filling. This was raised as the space below was filled up. The bottom was kept constantly in the concrete. The shell was allowed to remain until the concrete had set, when it was removed and placed on the next pile. Shells made of wood with cast-iron bands were also used, as being cheaper than the wrought iron. This method of treatment was applied to over 4,000 piles, but only such as had been seriously attacked, so as to prevent their total destruction. One important advantage of this method is that there is no disturbance of the piles or superstructure which rests upon them, a matter of special importance where the piles are under large storage sheds or other buildings.

There has been some little trouble experienced from logs or rafts striking the protected piles in rough weather, but the repairs have been small, and the protection, which has now stood seven years, bids fair to continue a number of years longer. Not only did the concrete completely cover the piles, and was itself covered with oysters, barnacles, etc., but the cement had found its way into the teredo holes, filling them even to the heart of the piles and forming within it perfect casts of the teredo. Not a single living teredo was found in the piles when afterward split.

The concrete used consisted of one of cement, two of sand, and three of gravel, with water enough to make it pass easily through the pipe. The cost of its use was found to vary from 80 cents per linear foot measured on the pile, to $1.50 per linear foot, depending upon the length of the protection, the location of the piles, and the conditions of the weather; but as the number of feet protected was only from high water-mark to the bottom, it was small compared with the total length of the piles, and much less than it would have cost to replace the old piles with new creosoted ones.

The next protection used was vitrified clay pipe. In 1892 a careful inspection was made of the piles of the Bay St. Louis and Biloxi Bay trestles; of these about one-half was found seriously affected, some were full of small holes, and a very considerable number with large holes. About 15 per cent. had been protected. It was decided at once to proceed with the protection, and also to strengthen the caps and stringers, which were too light for the existing rolling loads. The trestles had been in service 14 years, but were found, with the exception of a few ties, to be in a good state of preservation. It is expected that the life of the new cypress used will be as long as the remaining life of the old creosoted pine, and that, when renewal above the water is required 10 or 12 years hence, a frame trestle can be placed on top of the protected piles.

Instead of using concrete protection for th piles, in this case vitrified clay pipe was used, first for economy, and, secondly, because it was believed to be a more certain protection at the immediate surface of the mud, it having been found that with the concrete protection some of the mud had become mixed with the concrete at the bottom, killing the cohesive power and leaving the piles open for attack by the teredo. In most localities the teredo works near the surface of the water, between high and low tide, and his ravages become less as the bottom is approached. At Biloxi, this is different, due to the fresh water which flows in on top of the salt water, and the teredo thrives better near the bottom. It is quite common to find piles eaten off at the surface of the mud and showing no indication of attack above that point.

In order to allow the sections of pipe to be passed readily over the piles, they were cut off at some distance below the stringers, making it necessary to use a bolster or some other contrivance to support the stringers. The bolster was made to extend the full panel length, and its upper surface keyed to the lower surface of the stringers with cast-iron keys, to make it act with the stringers. This also permits the easy removal of the sticks or the bolster independently of each other.

There has been much trouble with both of these trestles on account of fires caused by sparks dropped from engines. It was therefore determined to box in the floor and cover it with gravel.

The sections of the pipe were fastened together with a composition of pitch and sand, applied hot. This was cooled as each joint was lowered below the surface of the water, and became hard so as to hold the sections firmly together. In this way section after section was added until a solid bearing below the mud surface was reached. Jacks were used to force the pipe down, after which the space between the pile and pipe was filled with sand, which was allowed to settle. After several months the pipes were again filled, to make up for settlement and that which had been washed out by waves, and they were then sealed on top with the hot pitch and sand.

The cost of this protection was 66 cents per foot of pipe for 16-in. pipe, and 71 cents for 18-in. pipe, which figures include freight and every expense. The length used on each pile varies from 2 ft. 6 in. near the shore to 15 ft. on each pile, the piles being 50 to 60 ft. long.

A test pile infested with live teredos in a healthy state was treated in this way, and at the end of 24 hours it was found that the teredos were all dead and turned black. In 48 hours more the bodies of the worms had almost disappeared. At the end of a week the pile was pulled up and split in pieces, and nothing could be found except the holes which the teredos had left. We were therefore fully assured of the utter destruction of the teredo by this method and the sure protection of the pile.

In cutting off about 4,000 piles at both trestles, not one was found to be decayed, although they had been in place 14 years. This is a good record for yellow pine treated with dead oil creosote. All indications would show that they would be good for at least 10 years of service. Untreated yellow pine piles would not last in this climate more than an average of seven years, assuming that the teredos did not eat them up in far less time.

THE HANDLING OF FUEL ON THE FRENCH, ENGLISH AND BELGIAN RAILWAYS.*

By M. Jullian.

HANDLING ACCOMPLISHED BY USING AN INTERMEDIATE DISCHARGE WITH BASKETS OR TUBS LOCATED ON A FUEL PLATFORM, FROM WHICH FUEL IS AFTERWARD TAKEN TO BE DUMPED INTO THE TENDERS.

Handling Accomplished without Mechanical Assistance.—The general arrangements of the yards and tracks are as follows: The fuel platform is built along a track upon which the engines run; its length is usually that of two engines—it is often greater, but very rarely less; as to its breadth, it varies with the amount of fuel which must be held. On that side of the platform opposite the engine track another track is located

* *Revue Générale des Chemins de Fer.*

which is used for the movement and switching of cars to be unloaded.

The platform is of such a height that the workmen can readily take their baskets or tubs which have been filled from the car and dump them into the tender. It is certain that these arrangements would not be the same if they were to do the work with baskets holding from 88 lbs. to 110 lbs., or with lorries or tubs carrying 1,102 lbs. In the first case, the workmen could raise baskets from 16 in. to 20 in. in their arms if it were desirable; in the second, it would be necessary to adopt such arrangements that the tubs or lorries would have to move either on a horizontal surface or on one slightly inclined.

Loading with Baskets.—This method is very extensively used, but has very little interest; the handling which is done with this arrangement is less expensive than that which is done without any platform, and it insures a more rapid loading; nevertheless, it requires two men about three minutes to accomplish the loading of a ton of coal into a tender, provided the baskets are filled in advance, and the men have only to lift them and dump them into the tenders. This system is quite economical whenever the fuel is taken directly from the cars; but when it is necessary to take it from a coal heap, the handling costs quite as much as it would if there were no coaling platform.

It may be interesting to review the expense of handling fuel placed on tenders with companies where the platform system is used.

Eastern Railway Company of France.....	$.0855	per ton
Orleans Railway Company.....	.1425	"
Western Railway Company.....	.135	"
Eastern Railway Company.....	.1235	"
Belgian State Railway Company.....	.0722	"
Midland Railway of England.....	.095	"
Southeastern Railway of England.....	.133	"

The lowest cost is on the Eastern Railway of France and the State Railway of Belgium. A great portion of the economy attained by the Eastern Railway Company is due to the fact that in handling their fuel they so arrange their service that a large number of engines are never brought to the loading platform at the same time; the result is that it has not been necessary to engage any extra workmen, and that when the regular gang is carefully handled the cost is light and the daily service all that could be desired.

There is another reason for the economy which has been obtained on the Belgian State Railway, of which it is well to say a few words. The handling of fuels on the Belgian State Railway, like many other classes of work on the road, is contracted for once every three years. The same contractor has charge of 19 different classes of work, handling the different kinds of fuel, the kindling wood, unloading sand, loading cinders, cleaning out engines and tenders, operating turn-tables, etc.

The head accountant fixes a price for each class of work, from which, as a basis, the bidders propose a certain discount. Some of these prices are very good, others less so; but the bidders, having different kinds of work to accomplish at the same depot, can utilize the *personnel* of their gangs to the best advantage, and thus sometimes offer a considerable discount for the sake of securing the contract. The contractor who is doing the work at present is giving a discount of 65 per cent, on the following basis prices:

Loading cars of fuel into heaps.....	$.0475
Loading the same fuel on to tenders.....	.057
Loading fuel upon cars after mixing.....	.057
Loading upon tenders with baskets placed upon a car or platform.....	.095.

This system requires a very careful oversight, and in order that this oversight shall be effectual it is necessary that there should be a large *personnel;* and still there is a certain amount of work which is more or less neglected, such as the cleaning of engines and the cutting up of fagots. On the other side, the contractors cannot do the work so cheaply in any way as by using low-priced help, which generally consists of men who cannot secure employment anywhere else and who require a constant oversight. This does not prevent the depot masters from exercising a keen supervision at all times to see that there is a rigorous execution of the conditions demanded by the head of the department, so that the contractor is obliged to make a discount for what he failed to do in the previous month. It may also be remarked that on the Belgian State Railways there is not a single platform, properly speaking. The fuel is unloaded into the enclosures made of old ties and built along the tracks which are used for the movement of engines; when these enclosures are once filled up to the top of the ties they serve as a platform for the baskets which are loaded upon cars, and when these are lacking the fuel is taken from the pile itself.

Loading with Tubs.—Almost every English company has adopted the method of loading with tubs or lorries at their coaling stations where there is a considerable amount of coal delivered to the engines. In a general way they use the coal just as it comes from the mines; but all the fuel which is delivered to locomotives is first hauled away in cars, and contracts are made with collieries for regular shipments; but at some stations which are a long distance from the colliery centers storage heaps are built up, and the piles from which a supply has been drawn are immediately replenished. The plants for handling the fuels have, therefore, been built with a view of unloading the fuel from the cars directly into the tender. The principal arrangements adopted, which we will describe, do not differ from one another except in unimportant details.

The Secondary Depots of the London & Northwestern Railway on the Bletchley-Willesden Line.—The fuel yard is located under a shed which is traversed by two lines of tracks intended for the movement of cars and for the storage of engines or cars. This last track is on the level with the depot tracks; the other is placed near the platform and is raised 2 ft. 9.5 in. The platform is located on one side and has a breadth of 10 ft. 5 in. with a length of about 82 ft.; it is above the level of the tracks of the depot by 9 ft. 2 in., and its floor is covered with a cement and cast-iron plates carefully joined together; there are no tracks above it for lorries. The loading track for engines is outside of the shed, and is naturally placed along the wall of the platform; this wall has an opening 5 ft. 10.9 in. wide and 9 ft. 10 in. high to allow a drawbridge to drop through, which is used for the unloading of the lorries. The cars that are to be unloaded are run in upon the elevated track by an engine; they are there stopped upon a scale by which their exact contents are determined; then they are pushed on so as to bring as many as possible next to the platform; the lorries are run up next the cars and filled with a shovel and then run down over the side platform until they reach the engines. Three men are generally sufficient to do the work at these yards: two fill the lorries and a third moves them as it may be necessary.

When an engine is run up it is stopped so that it is in a proper position for taking water from the crane, and in this position the tender is opposite the drawbridge; the man who pushes the lorries about drops the drawbridge and rolls the lorries out to a bumper upon this bridge, and then by means of a bolt controlled from behind he opens the door located at the side of the lorry; the drawbridge does not swing, and there is nothing that can be moved except the lorry. Each yard usually has from 15 to 20 lorries, each containing half a ton of coal, they being of the following dimensions: Length, 3 ft. 3 in.; width, 2 ft. 9 in.; height, 2 ft. 9 in. The lorries are made of iron.

It requires about a minute or more to fill a lorry, but it can be emptied into the tender very quickly. At Bletchley an engine holding five lorry loads, or 2½ tons, can be loaded in about two minutes, or before the engine has finished taking water; it is hardly necessary to say that in order to obtain this result the lorries must be loaded before the engine arrives. The price generally paid is $.05 for loading a ton of coal on the tender, and the workmen make about $.72 per day. When the cars are emptied they are hauled away and replaced by others with full loads. At small stations the shed is covered by the water-tank, as shown in fig. 2. In the large depots the arrangements are the same; at Manchester, for instance, the only difference consists in the length of the platform, which will hold four cars, and in the roofing of the shed, which is simply a double roof, and also contains two unloading bridges, as shown in figs. 4 and 5.

At Rugby the arrangements are the same as at Manchester; but a supplementary shed has been added which serves for loading the station switching engines, or those small machines which run to and fro and carry but about ¼ ton of coal, with baskets; this is shown in the plan of figs. 4 and 5.

At Rugby, where about 130 tons are loaded each day, the work has not yet been put upon a piece-work basis; they are investigating the matter so as to put the price for loading on the proper basis in accordance with the number of baskets handled. We see that these arrangements have the advantage of loading very rapidly and at a low cost; it is true that they have done away with the intermediate operation of unloading into heaps. As for the oversight, the only thing that is necessary to look after is the total amount received and distributed each day; as to the amount given to each engine, they trust to the skill of the workmen, who can easily estimate the amount contained in a lorry. This oversight is evidently insufficient, but it is satisfactory, because the premiums for coal savings given to the engineers are so small that no one has any particular interest in making fraudulent entries as to the amount of coal delivered.

Caledonian North British & Midland Railway.—In the arrangements which we have just examined the cars for unloading are located a little below the level of the platform, so that the filling of the lorries is done slowly and with considerable fatigue, especially when the fuel has been emptied so that the men are working close to the floor of the car. The Caledonian, North British and Midland companies have adopted another arrangement by which the cars to be unloaded stand upon tracks whose level is somewhat above that of the tender which is to be filled. In some cases this arrangement has been obtained without any very great expense, as at St. Rollox, where the station tracks are on two quite different levels; in other cases it has been necessary to build inclined planes from one portion of the yard to the other. St. Rollox depot, on the Caledonian Railway, which is located in the suburbs of Glasgow, figs. 6–10, is only used for freight traffic, and as it distributes but about 90 tons of coal a day, it has no storage heaps. At a distance a single bay 4 ft. 7 in. wide is left open for dropping the drawbridge, which is of a special arrangement, as shown in fig. 10.

The movable portion of this bridge is itself made of two parts: one, which is lowered at the same time as the bridge, and the other, which remains fixed and horizontal; the latter is composed of a strong frame of angle iron, and is fastened to the first by a hinge parallel with that of the drawbridge itself. This frame rests normally upon the bridge; but if it is desired to load from its end, the lorry is pushed out there. It then tilts down and takes an inclination limited by two lugs fastened to the drawbridge.

When an engine is run up for loading, a workman takes a lorry, pushes it out upon the drawbridge until the wheels come up against the semicircular bumper which is on the outer portion, while the other wheel stands near the front edge of the angle-iron frame. The weight of the lorry then facilitates the swinging of the crane, and it is enough to turn the bolt

Fig. 2–3. BLETCHLEY AND WILLESDEN YARD

Fig. 2. SECTION ON CD.

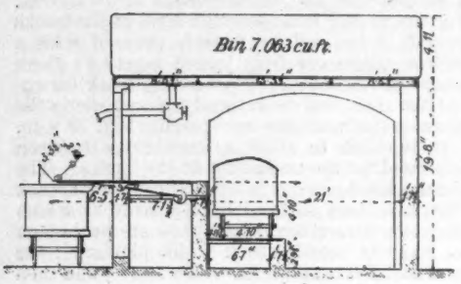

Fig. 3. Plan

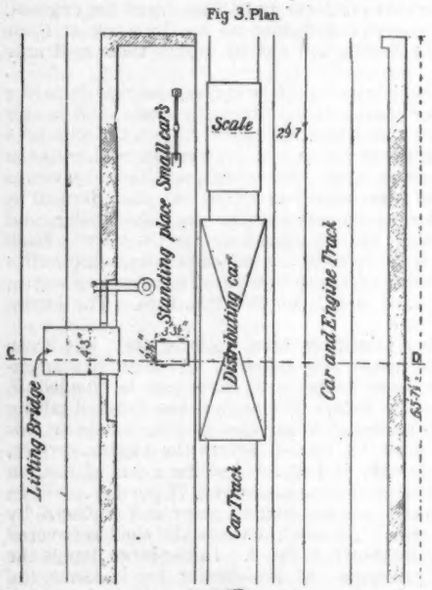

Fig. 4–5. MANCHESTER AND RUGBY YARD

Fig. 4. SECTION ON CD

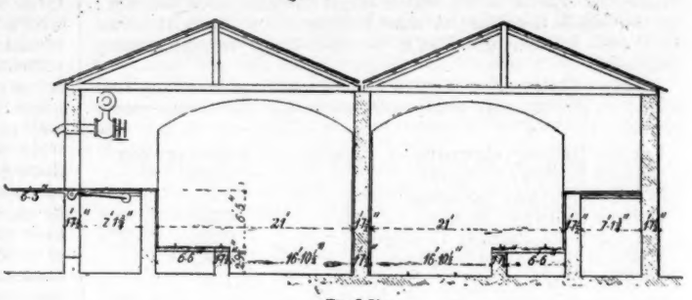

Fig. 5. Plan

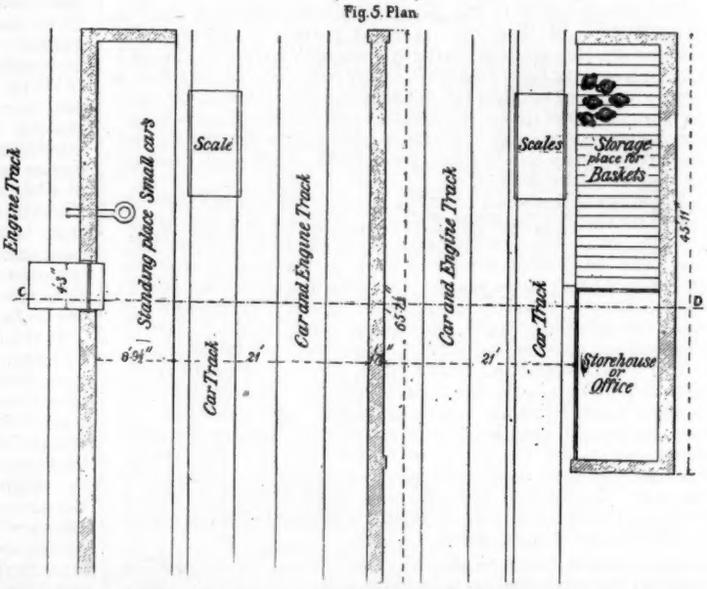

METHODS OF HANDLING FUEL ON THE FRENCH, ENGLISH, AND BELGIAN RAILWAYS.

of 656 ft. from the station the yard is separated into two parts at different levels, and the depot itself is built on a platform on a triangular lot, with the low portion of the yard in front and the high portion at the back. Advantage has been taken of this arrangement to locate the coaling place. It is covered just as it is on the London & Northwestern, and occupies a strip of ground 39 ft. × 53 ft. This is clearly shown by figs. 6 and 7, and, thanks to the contour of the ground, it has been possible to locate the floor of this coaling station about 16 ft. 5 in. above the level of the lower tracks, and to switch in the cars to be unloaded upon a track passing through the coaling shed and located at almost the same height above the level of the track where engines are to stand while being coaled. The floor of the shed is made of cast-iron plates and old boiler sheets; it is 2 ft. 9 in. below the level of the car track, and consequently the lorries can be filled very rapidly and without very great exertion by means of a small shute. These cars, fig. 9, are 20 in number, and hold ½ ton each; they are made of wood, with iron angle bars for corners, and are of the dimensions shown on the engraving. When they are once filled they are run into the shed to await the arrival of an engine standing on the loading side. The shed is closed by a partition, and which holds the panel located on the front side to operate the lorry and dump its contents into the tender.

Three cars of coal can be run into the shed at once and unloaded at the same time. Seven men do the work at St. Rollox, three by day and four by night; they are not working by piece-work, but each earns $.83 per day, so that the cost of handling a ton is about $.063.

The work is very rapid, and a tender can be loaded with about two tons of coal in three minutes by working in the following manner: three cars are pushed in on the yard track; as soon as an engine arrives, three shovelers each take an empty lorry and run it up in front of a car, and climbing upon the latter, fill the lorry. The fourth shoveler waits until a lorry is filled, and then shoves it across to the tender. He then shoves another lorry to the first shoveler, and this fourth lorry is usually filled before the other three have been unloaded into the tender. There is no loss of time. If the lorries are filled in advance, it takes about two minutes to unload them. The rapidity of the operation is due to the automatic tilting of the lorry when it reaches the end of the draw. The cars to be unloaded are shoved under the shed three times a day; before this, however, they are run over scales in order to determine

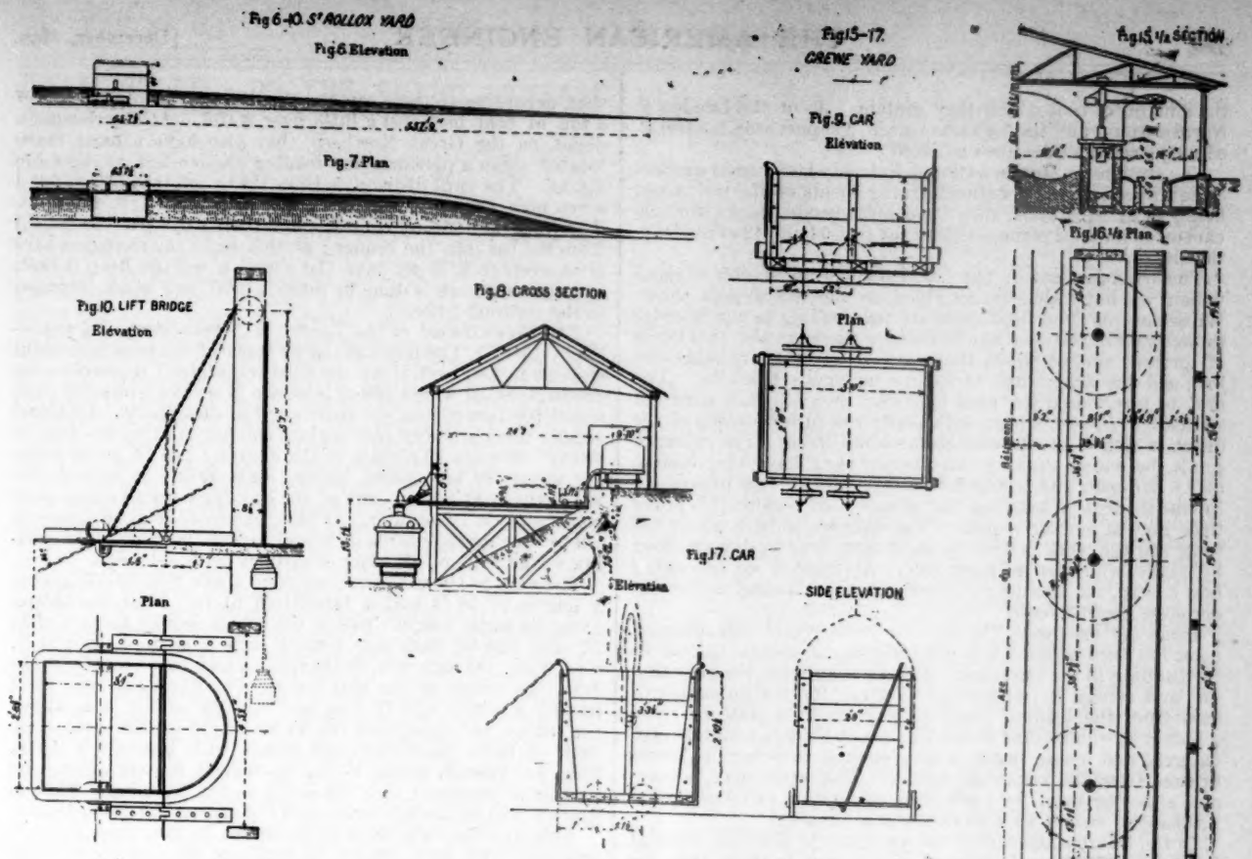

FIG.11.

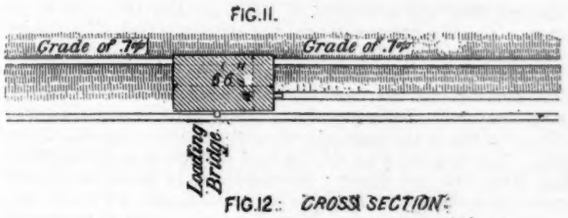

FIG.12. CROSS SECTION.

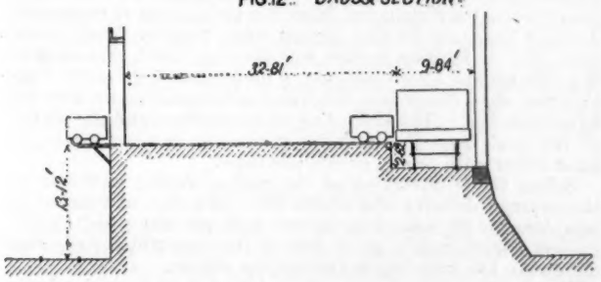

FIG.13.

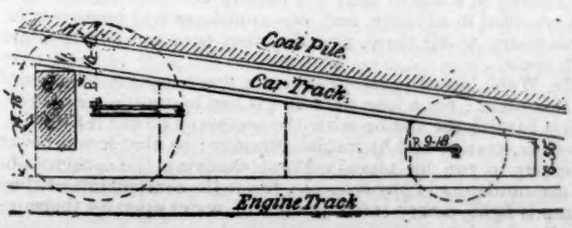

FIG.14.

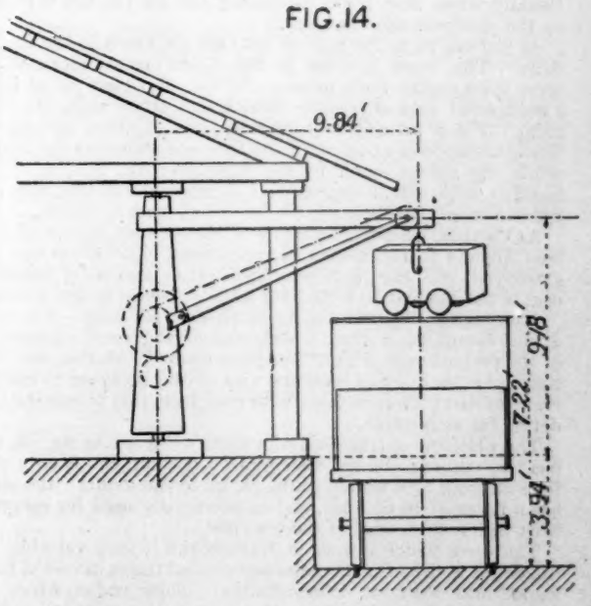

HANDLING OF FUEL ON THE FRENCH, ENGLISH, AND BELGIAN RAILWAYS.

the amount of coal which they contain. As on the London & Northwestern, and for the same reason, a supervision is extended only over the quantities received.

The stations at Motherwell and Palmady have yards similarly equipped; but the natural arrangements of the tracks not being as at St. Rollox, they have built inside tracks for the cars on an inclined plane, as shown by figs. 11 and 12 of the Dundee depot.

The arrangements of the Dundee depot are similar to those which we have already described, as the engravings show. We see in this depot that there are two loading points in order to facilitate operations, but in Dundee there are also two kinds of lorries; one, of which there are 15 in number, holds 500 lbs., and the other, also 15 in number, holds 1,000 lbs. The first is rarely used for road engines; they are only used for switching engines, which are usually run in for coaling at the draw, which is at the end of the blind track. The entrance grade, by which the cars run into the yard, has an inclination of 1.4 per cent. and a length of about 722 ft. It is interesting to note the cost of handling fuel at this yard because it is lower than that at similar depots. The daily delivery is about 130 tons, and the work is done by eight men, four by day and four by night, who earn $.71 per day. As there is no unloading into a heap, the handling of a ton of coal delivered to the tender costs about $.0437.

Handling Coal with Cranes.—In yards where this arrangement has been adopted it is not necessary to elevate the tracks for running in the coal cars. The arrangements are very simple, and consist in separating the track for the unloading of cars from the loading track of engines by a platform upon which a movable crane is located, which swings about a vertical axis, and whose boom is long enough to swing the lorries or tubs from the car to the tender. This crane may be movable either by hand, by a windlass or capstan, or by any other mechanical means, such as steam or hydraulics.

In the installations which we are about to describe, some of the cranes are moved by hand, and in one instance they are moved by hydraulic pressure.

The Carlisle Depot of Caledonian Railway.—The crane has a capacity of about 1,875 lbs.; it is located at the center of the platform, and its boom has a length equal to the distance from the vertical axis of the crane to the center of the entrance track. The work is done with tubs of 1,000 lbs. capacity and not with lorries—that is to say, the movement of the coal is made with the crane; generally the tub is placed in the car to be filled. Usually when they begin unloading the car the tub is placed on the platform close at hand.

At Carlisle 90 to 100 tons of coal are delivered to the engine daily. The work is done in the following manner: When there is no engine there to be coaled the shovelers fill as large a number of tubs as possible, which they stand along the platform. When an engine comes up, one of them devotes his whole attention to hooking on the tubs and swinging the crane, while the others stand by the windlass; but in spite of the rapidity with which they move it is very seldom that they can lift and empty a tub into a tender in less than a minute.

At Carlisle, where the energies of the men are very well utilized, thanks to the general arrangement, eight shovelers are employed, who earn $.76 per day, so that the cost of handling coal is about $.061 to $ 0665 for a ton loaded into the tender.

Burntisland Depot on the North British Railway.—The yard at this depot has a slightly different arrangement on account of the preparations which have been made for storing coal in a heap, and that it has been the aim of the designer to use the crane to carry the tubs filled with coal from this pile to the tender as far as possible.

The platform is trapezoidal in form, as shown in fig. 13, and has two cranes; one has a swing of 9 ft. 2 in., and is only used for swinging tubs loaded in the car on to the tender; the other has a boom of 16 ft. 5 in., and is principally used for carrying tubs which are loaded at the coal pile.

The work which is done at Burntisland is very variable, for the depot is used for the handling of coal trains intended to be loaded into boats for transportation. These trains, which are not scheduled on the time-table, are run as extras; so that while some days the yard may deliver only 80 tons of coal, it frequently rises to 140 or 150 tons. This is the reason why they have been obliged to provide a coal heap. The gang is necessarily made up according to the necessities of the case as they arise, and sometimes are not composed of the same men two days consecutively. The work is very regularly done, and these are the only reports which we have been able to gather in regard to the expense which is necessary for carrying on the work and thus relate to all that is done—that is, dumping on to the heap and loading into tenders; and again, these reports, are not very certain, as the shovelers are often at work at other things. There is no doubt, however, but that, according to these reports, the different manipulations of a ton of coal here cost a little over $.076. At Peterborough depot, on the Great Northern, they also have a fixed crane located upon a platform for loading the tenders, as shown in fig. 14. The yard distributes from 120 to 140 tons of coal, and seven men are employed during the day and eight at night. The work is done by contract, and costs $.076 per ton loaded from the car into the tender; at this price the shovelers earn at an average $.76 per day. In winter a storage heap is built up, but this work is done by outside help, and is not included in the contract price.

The Crewe Depot of the London & Northwestern Railway.—(Figs. 15–17.) The depot at Crewe is one of the most important stations in England, if not the most important; it provides for 180 engines, of which 150 at least are in service every day, and about 300 tons of coal are distributed to these daily. In actual service there are very few engines coming in at night—that is to say, between 10 o'clock in the morning and 10 in the evening about 130 are coaled, leaving only 20 on the average for the night. At some hours of the day there are as many as 15 coming in in 10 minutes. It has, therefore, been necessary to adopt such arrangements as would permit the most rapid loading of the tenders, all other conditions being set aside.

The yard is located in a rectangular space, figs. 15–17, having a length of 98 ft. and a breadth of 61 ft. Four tracks run along its entire length; two in the center occupy a space of 20 ft. and one on each side occupy each a strip of land 11 ft. 6 in. wide. On each side, in the space which separates the tracks from the center of the side tracks, a platform has been built having a width of 7 ft. 6 in. and a height of 5 ft. 4 in. above the tracks, and occupying the whole length of this space. On each of these platforms three cranes, wi h booms 9 ft. 10 in. long, are located, whose lifting movement is accomplished by hydraulic pressure; they are easily swung by hand. The engines run in on the side tracks and the cars on the center tracks.

Although the tubs are always carried by the crane, they are provided with little wheels to facilitate the movement of adjusting them near the cars or of moving them about the platform. Their capacity is 1,000 lbs. The work is done entirely with hand cranes. The lorries are set into the car to be unloaded or run up alongside of it, as the case may be, and filled or shoved over the platform or lifted by the crane on to the tender. To expedite this work, the stirrup which lifts the tub is fastened to a small traveling trolley upon the horizontal arm of the crane. The cars to be unloaded first are run over a scale before coming into the yard, and also a second time on leaving it after they have been emptied. They thus exercise a supervision over the total quantity of coal received and distributed daily. In a general way all the fuel delivered to the engine is taken from the car direct; nevertheless, in order to provide for emergencies a coal heap is constructed, and it usually happens that coal is distributed from this heap about twice a year. As these heaps are usually located some distance from the engines, and as loading engines with the fuel which they contain is a difficult and slow operation, a preference is given for running the cars direct into the yard and unloading them as we have described. The unloading on to the heap and the taking of the coal from the heap for the tender is always done by hand either with basket or wheelbarrow.

Before the construction of the coaling station as it is now, the average delivery was about 250 tons a day, and the work was done by 20 men, who earned $ 82 per day; but the engineers complained a great deal of the time which they were obliged to lose standing at the coaling station.

The average cost of a ton of coal loaded on to the tender is about $.07. There are 40 tubs of 1,000 lbs. capacity each in the station for distributing 300 tons of coal daily, and only 15 men are employed, who are paid by the piece; they are paid $.0475 per ton loaded on the tender; but there is an additional payment of $.013 per ton for filling the tubs. The average cost of a ton of coal loaded on the tender is about $.066.

The plant, therefore, shows no appreciable saving in the handling of the fuel, but it has the great advantage of only detaining an engine on the loading track for about three minutes. In fact, with this system they are always prepared to load two engines, and, if necessary, four engines at the same time, and the loading of a ton of coal will require 50 seconds if the lorries are filled in advance, and one minute and 15 seconds if it is necessary to fill them, provided that they use two tubs at each crane.

Mr. Webb has not gone to any very great expense in setting up this plant; for a long time he has had hydraulic machines, which furnish the station with the necessary power for its old elevators, cranes, and hydraulic capstans; so that it was only necessary to run his pipes, without changing the capacity of his accumulators in any respect; for as the construction of the cranes is light, a very small amount of water operates them.

METALLIC TIES ON THE GRAND CENTRAL RAILWAY OF BELGIUM.

THE accompanying engraving shows two types of metallic ties—namely, the Caramin and Thy-le-Château, which have been used on the lines of the Grand Central Railway of Belgium. The engravings, with the figuring which is upon them, give such a clear idea of the general construction of the tie that it will not be necessary to enter into a long explanation.

As we see, the management of the Grand Central Railway has tested two types—namely, a type without wooden filling pieces and a type with such pieces. All told, they have laid 11,624 ties on a length of line 6.2 miles long. They were laid in the years 1886, 1887 and 1888. The ballast was composed of broken stones, cinders, and river gravel. The rails, which are made of Bessemer steel and which have a length of 19 ft. 8 in., weigh 83.8 lbs. to the yard; they rest upon seven ties, the spacing of which is in conformity with the outlined sketch, fig. 1, and so arranged as to give a suspension joint.

The ties are 8 ft. 6.3 in. long; weigh, in the old model, 131 lbs., while in the new and strengthened model they weigh 133.6 lbs. each. They are made of iron as well as are also the rivets and the clamp bolts; the tie plates and bolts being made of steel. The heaviest engines which are run over this line weigh 52.3 tons in working order; they have four pairs of wheels coupled, and their rigid wheel-base is 14 ft. 1 in. The maximum speed which is authorized by the government is that of 37.3 miles per hour for passenger trains, 28 miles for mixed trains and 15.5 miles for freight trains. Smith's vacuum brake is used on the passenger trains and the screw brake operated by hand on freight trains. Up to the present time the management of the Grand Central Railway is very well satisfied with the results of these metallic ties when regarded both from the standpoint of stability of the track as well as from that of maintenance, which, according to the reports of the department of roadway and buildings, is more economical than that for those portions of the track which are laid with ordinary wooden ties. The following are some of the official figures:
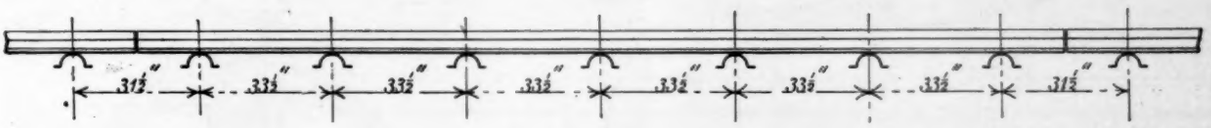
The expense of maintenance per mile for main line of tracks, as well as for sidings laid with non-injected oak ties, was, on the Grand Central Railway of Belgium, $95,355. This amount is the average of the cost for the years running from 1881–90 inclusive. The expense of maintenance per mile of track with metallic ties was only $11.87. This figure is the average of expense for the years 1886–90 inclusive. No defects have yet been reported in regard to these metallic ties or their fastenings. The track, which is laid upon wooden blocks, is still, according to the reports which the Chief Engineer of the Grand Central Railway of Belgium has made, in far better condition than that of the ties which do not have these blocks.

THE METALLIC TIES.

In the course of a recent discussion of the Railway Budget at the Belgian Parliament, different speakers asked the Government for new tests of metallic ties in order that it might come to the assistance of the metallurgical industry. The Minister of Railways, Mr. Vandenfeereboom, replied to them in a categorical way that the results obtained in the last tests made on a great scale with 75,000 ties by the management of the State railways, and which cost $171,000, had been so unfavorable that they did not think it advisable to go to further expense by increasing the losses which had been thus incurred, and which were very much to be regretted; under such conditions he could not favor new orders for the State railways.

The advocates of a continuation of the tests of metallic ties recognize that while the systems which had been experimented with on the Belgian State railways—namely, the Post and Braet and Bernard ties, had not fulfilled the conditions which had been desired, and had not furnished a good track with metallic superstructure, and while the results had been disastrous, they still thought that the Department of State Railways should make a further test of other types of ties that were constructed in a more rational manner. But the minister remained unmoved in his negative decision. The advocates of renewed tes's were somewhat piqued by the fact that the management of the large systems of German railways still continued to give important orders for the delivery of a considerable quantity of metallic ties. What, then, is the reason for this difference in the position taken by the two systems of roads? We think that it will not be without interest to examine into the question.

In the first place, it should be noted that the question of metallic ties was the subject of an animated discussion at a recent session of the Railway Congress held at St. Petersburg, when the report of Mr. Kowalski, Chief Engineer of the Bone-Guelma Railway, was presented, and that in this session, at which nearly 400 members agreed, the following conclusion was reached: "The use of metallic ties will permit of a saving of expense of maintenance when they fulfil the conditions for rational use—in other words, if their form has been so designed and their weight settled by paying careful attention to, first, the conditions of the traffic—that is to say, the speed and weight of the ties; second, to the conditions of the structure of the track and the nature of the subsoil; and third, to the kind of ballast used," etc.

The engineers of the Belgian State Railway have made some reservations from this formula: "By only using metallic ties on lines where the traffic was comparatively light and run over by trains at a low speed." Almost all of the opponents of metallic ties at the St. Petersburg Congress argued from the standpoint of the unfavorable results of the last tests which were made by the Belgian State Railways. It is for this reason that we would consider it interesting to examine into the causes of this want of success from a technical standpoint.

The Bernard ties, which were made of rolled iron and riveted, and which, to the number of 8,000, were removed at the end of a few months on account of a wear in the riveted joints—a wear which was rapidly on the increase with the number and speed of the trains.

The hollow ties of the Post and Braet outlines showed themselves defective in service, as follows:

A. The rectangular holes for the fastenings produced cracks and fractures as much as 1.2 in. in length. These fractures, which were discovered in a large number (18 per cent. for the Post and 75 per cent. for the Braet ties) on the heavy traffic line between Brussels and Antwerp in five years of service caused a large number of the ties in question to be removed from service.

In France the same results were obtained with the Post tie, but on a smaller scale. These cracks at the holes, which were foreseen in the Belgium ties, should be imputed to a double cause wherein, contrary to the advice of the department, the steel used was not *very mild*, and because the holes for the fastenings were not punched under the conditions that ought to have been observed. The purchasing agent permitted the holes to be punched instead of drilled on the express condition that the work should be equally good. This opinion is corroborated and shared furthermore by several road masters who have laid Heindel ties on the North Austrian Railway, and who have had no trouble with cracking in the nine years they have been in service. We may add, too, that the method of fastening for the Heindel tie appears to be of a better design than that which was used in the Post and Braet ties by the State Railway of Belgium.

It may not be out of place, however, to say that Mr. Braet had designed a special method of fastening for his tie, but that it was not used on those which were laid on the Belgian State Railway. It is shown in the accompanying drawing.

We have no doubt but that if the holes had been drilled and they had not been allowed to exceed a certain size for the ties, the cracks with which they have been troubled would not have appeared. The first fault, then, which can be found with these ties, is one which can be extended to metallic ties in general.

B. In consequence of the alternating up-and-down movement of the hollow tie, it causes a hammering out of the ballast which is transformed into a powder and later into mud by the rain. Each time that the tie rises it sucks in this mud and the ballast loaded with it, forming a kind of macadam which finally forms a hard and compact core necesitating the removal of the ballast from beneath the support. This is the first period of maintenance which is universally recognized as expensive. Under the action of the passage of trains the ties were subjected to a scraping which caused changes both in the longitudinal and transverse directions. These disturbances,

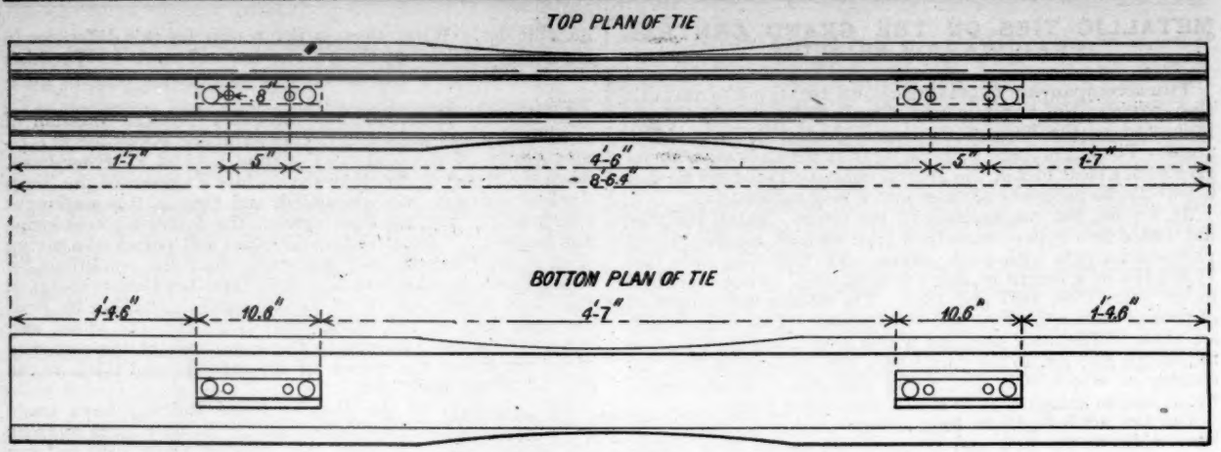

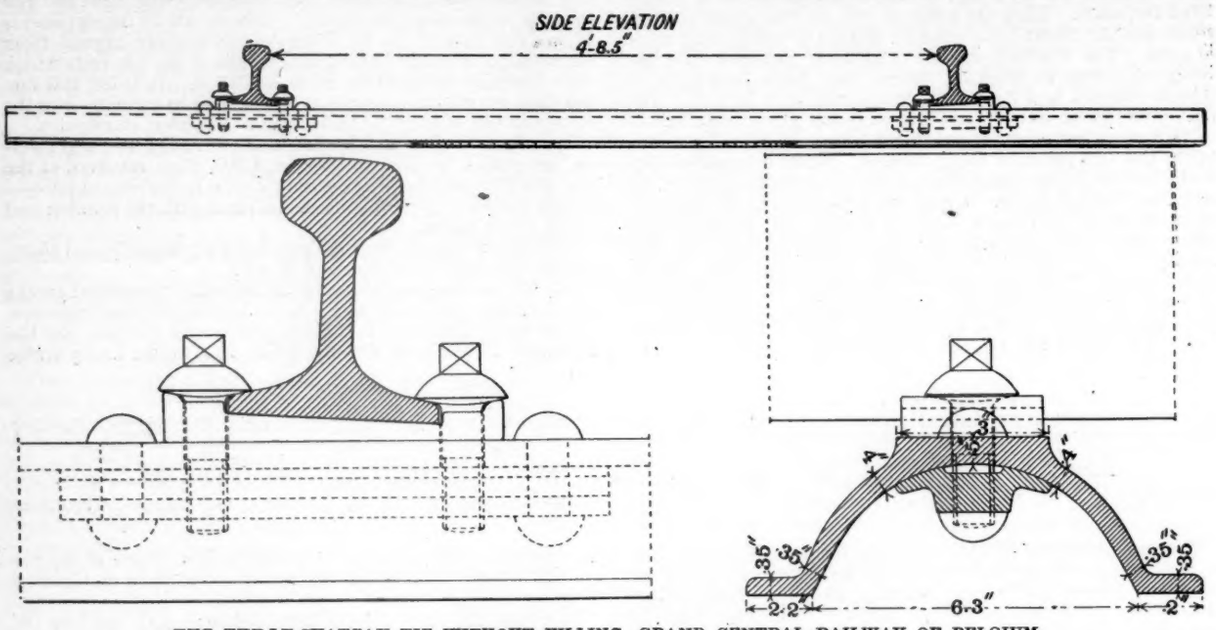

THE THY-LE-CHATEAU TIE WITHOUT FILLING, GRAND CENTRAL RAILWAY OF BELGIUM.

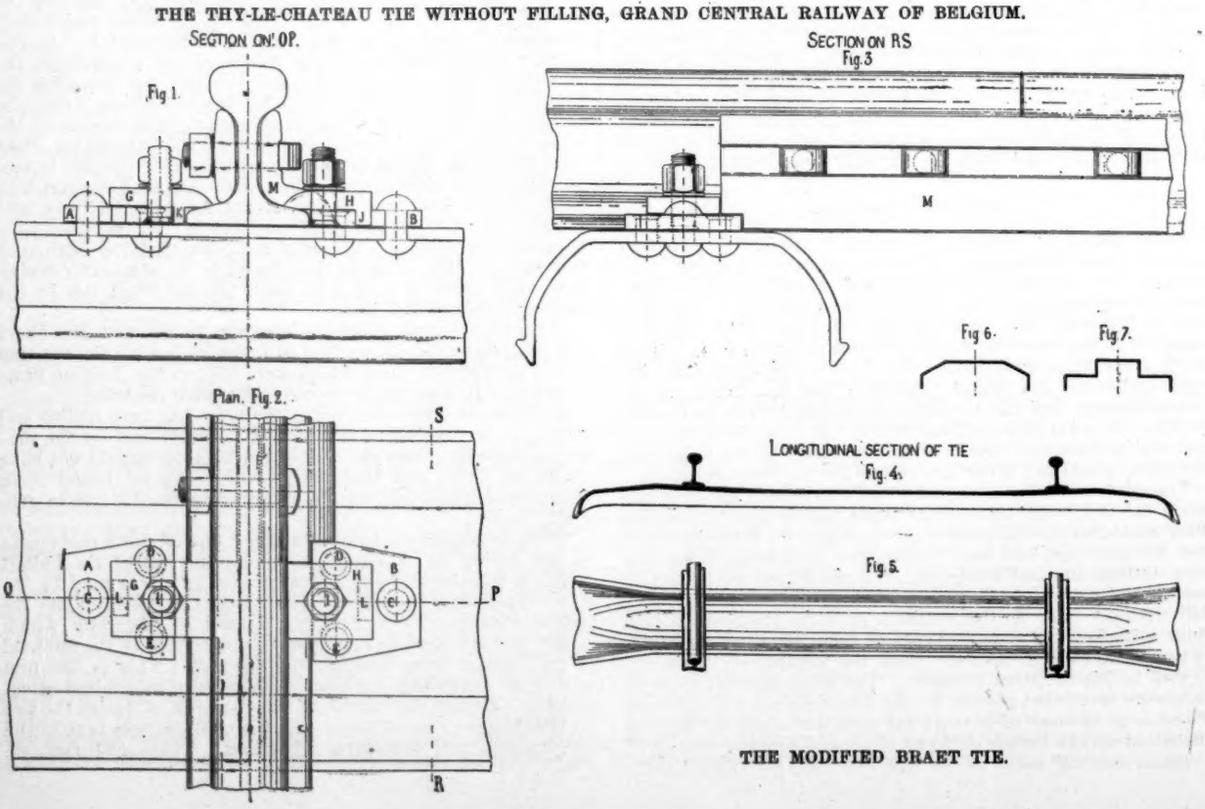

THE MODIFIED BRAET TIE.

which exist for all types of hollow ties and which have been pointed out among others by Mr. Schubert in 1892 at the meeting of the Verein fur Eisenbahnkunde, at Berlin, increase, as it is readily understood, very rapidly and very notably with the speed of the trains. While for a maximum speed of from 47 to 50 miles per hour changes in level are small, and while these small movements exert hardly any influence upon the ordinary track, it has been shown from experiments which have been made at speeds of about 56 miles an hour that they become quite dangerous and may even cause derailments in consequence of the hammer blows and depressing effect of the rolling stock upon a track which has been thus deformed, and it is therefore absolutely necessary in order to bring the track up

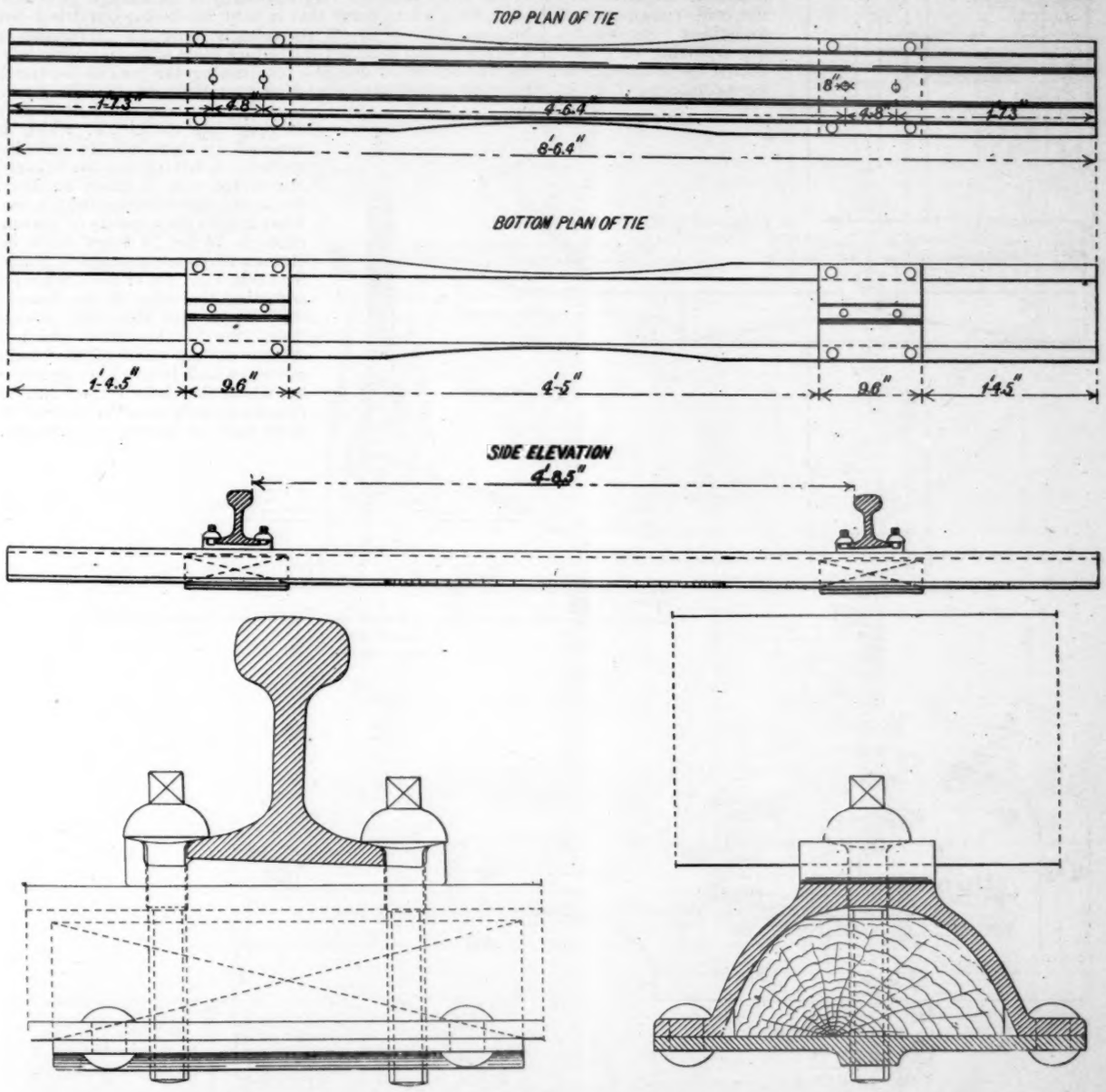

THE THY-LE-CHATEAU TIE WITH FILLING, GRAND CENTRAL RAILWAY OF BELGIUM.

to good alignment to demolish the hard cores of ballast which are formed inside the ties. Then the period of expensive maintenance immediately begins. It is thus easily explained why the expense of maintenance of metallic ties on the Belgian State railways was very materially above that of the maintenance of wooden ties, while, especially on the Northern Railway of Austria, there was a saving of 25 per cent. after nine years of service in favor of the metallic tie, as has been stated. Finally, it does not appear to be desirable that the hollow form of tie should be used. In other words, it is well to avoid the use of such ties as permit of the formation of a compact core beneath them, unless they can be easily removed and give great lateral strength. This opinion was also thoroughly brought out in the last discussions of the Verein fur Eisenbahnkunde of Berlin.

According to a report made by Mr. Flamache, Chief Engineer of the Roadway for the Belgian State Railway, for discussion at the St. Petersburg Congress regarding the question of metallic ties, there are some essential conditions to be fulfilled by the metallic tie of the future for lines which are to be traversed by high speed trains:

"1. *They should not require any tamping into the hollow space* —that is to say, they ought to be able to be moved longitudinally and transversely just as a wooden tie is, which has a flat bottom. It is even objectionable to give it any curvature, bendings, or variations of section, or to provide it with bosses or have projecting rivet heads. *Its shape should be perfectly prismatic.*

"2. It should weigh from 165 to 176 lbs. and be made of steel in order to have a strength of from 54,000 to 58,000 foot pounds. Iron is not strong enough. The U form right side up or inverted is not adapted to resist bending stresses, and ought to be excluded. *The outline should be symmetrical* above and below the neutral axis.

"3. The strength should be obtained with a full outline—that is to say, the sheering strength of the riveted joints should be excluded.

"4. The fastenings should not require rectangular punched holes, but all holes should be drilled, and round."

SPECIAL TOOLS AT THE READING SHOPS OF THE PHILADELPHIA & READING RAILROAD.

CRANK-PIN CUTTER.

EVERY master mechanic and workman in shops has experienced the trouble which is always found with the cutting out of the crank-pins which have become worn, or which, for any other reason, it is necessary to remove from the wheels. The machine which we illustrate is a very simple device, operated by hand, for doing this work. When the pin has been pressed into the wheel and riveted over on the inside it is difficult to get at with the cold chisel, and it sometimes necessitates the removing of a portion of the other operating mechanism. The tool which we illustrate is very clearly shown, both in the drawings and the dimensions on the same. It is bolted through the 1-in. slots to the back of the wheel or to the frame of the engine, the latter being the most suitable position. This allows freedom for the motion of the handle. The tool is placed in the tool-holder at the lower end of the spindle, and is fed down to its work by the feed-screw at the top, slipping through the beveled gear which is driven by the pinion; thus, after the machine is in position it is the work of but four or five minutes to cut out the riveting at the back of the pin, and make it perfectly free for being driven out with the ram or pulled out with the hydraulic pressure. There is no cutting out of the back of the wheel, which is left in perfect shape for the placing of the new pin, and its subsequent riveting. The handle, which is 15 in. long from center to center, driving a pinion which is geared up with a little over 3 to 1 for the driving-gear, gives ample power, and the check nuts on the spindle serve to take up the lost motion and keep a perfect alignment.

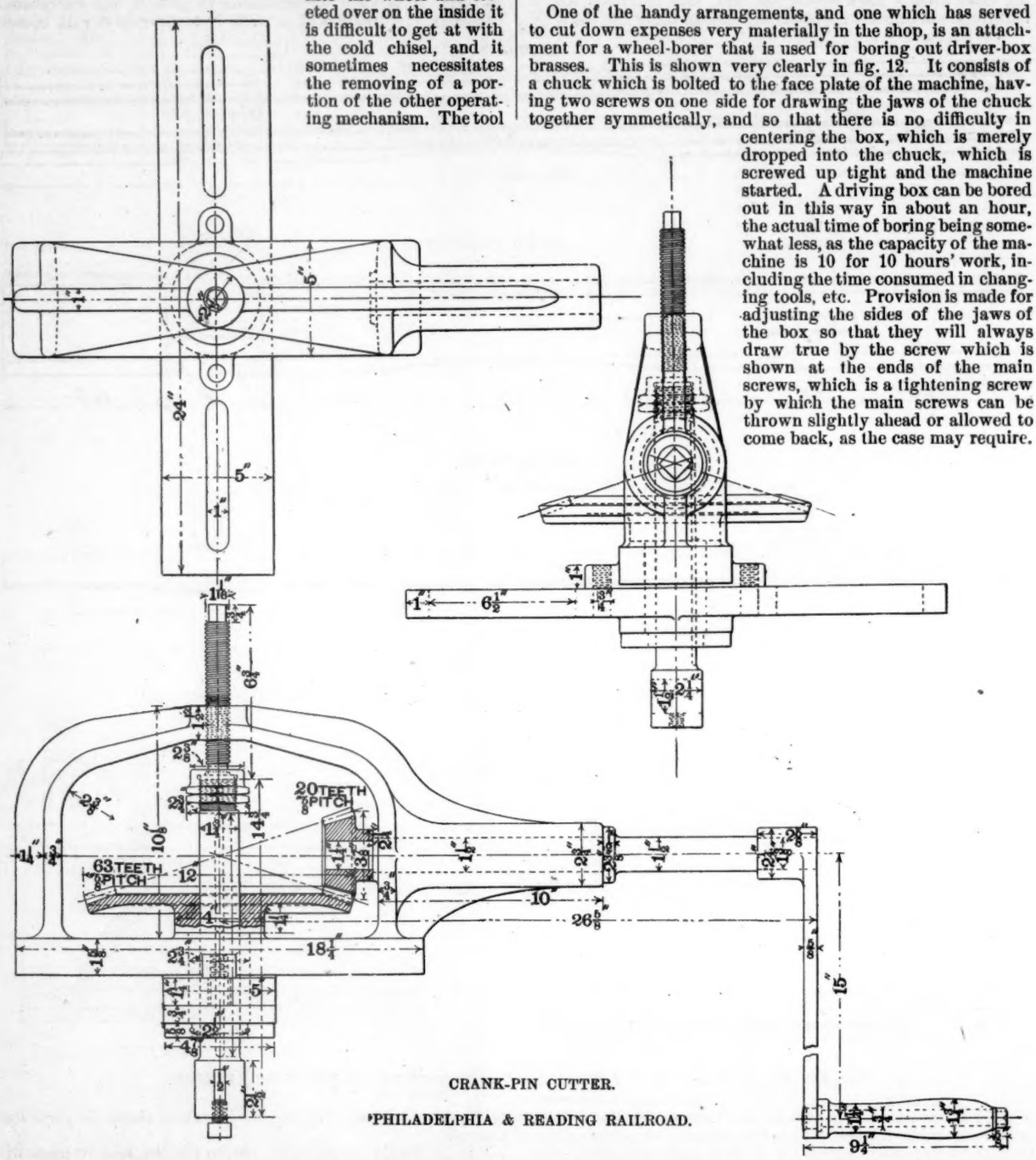

CRANK-PIN CUTTER.

PHILADELPHIA & READING RAILROAD.

DRIVING-BOX CHUCK.

One of the handy arrangements, and one which has served to cut down expenses very materially in the shop, is an attachment for a wheel-borer that is used for boring out driver-box brasses. This is shown very clearly in fig. 12. It consists of a chuck which is bolted to the face plate of the machine, having two screws on one side for drawing the jaws of the chuck together symmetically, and so that there is no difficulty in centering the box, which is merely dropped into the chuck, which is screwed up tight and the machine started. A driving box can be bored out in this way in about an hour, the actual time of boring being somewhat less, as the capacity of the machine is 10 for 10 hours' work, including the time consumed in changing tools, etc. Provision is made for adjusting the sides of the jaws of the box so that they will always draw true by the screw which is shown at the ends of the main screws, which is a tightening screw by which the main screws can be thrown slightly ahead or allowed to come back, as the case may require. Of course, such an adjustment as this is only needed after considerable wear has taken place, and it is done very rarely. It is simply necessary that the man who has charge of the machine should see that his boxes are held centrally by the two jaws of the chuck by an occasional inspection.

PISTON-ROD JACK.

The accompanying illustration shows the construction of a very simple piston-rod jack, which was especially designed

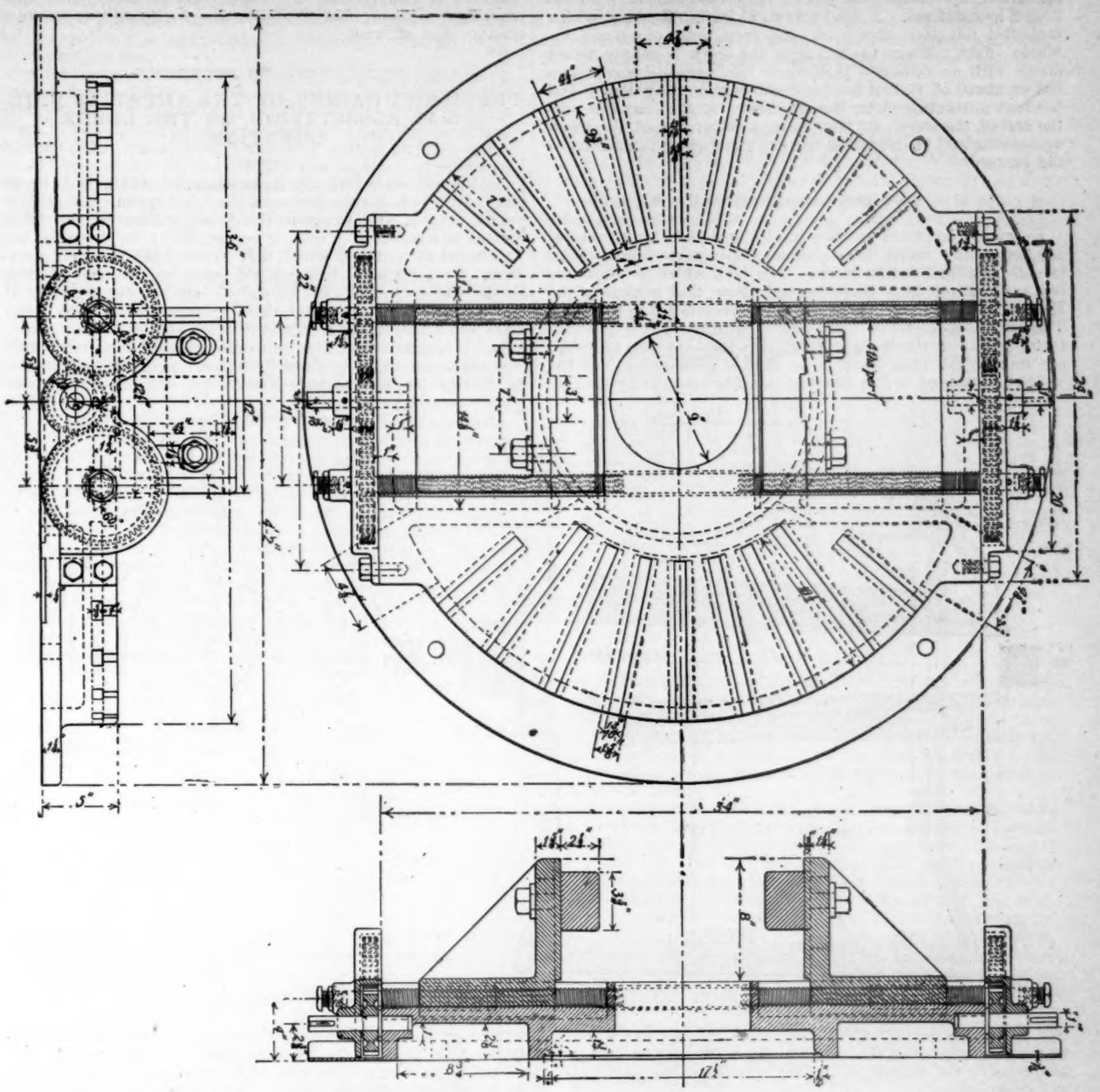

CHUCK FOR BORING DRIVING BOXES ON WHEEL-BORER.

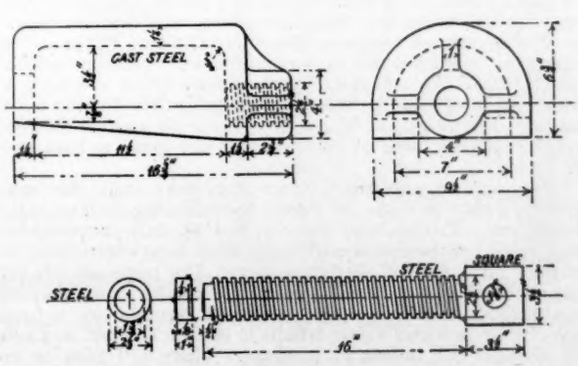

PISTON-ROD JACK.

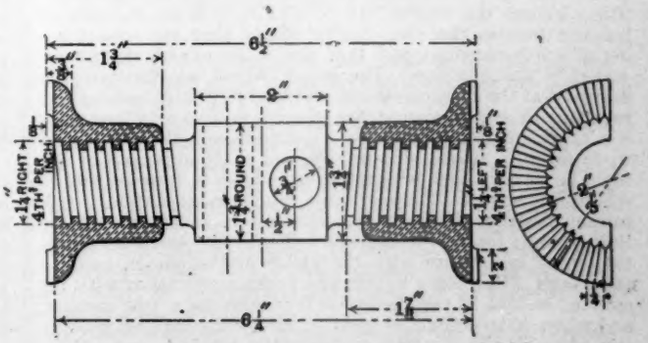

CAR INSPECTOR'S JACK.

Special Tools on Philadelphia & Reading Railroad.

for taking the piston-rods out of the cross-heads of the compound locomotives. A steel screw, 2½ in. in diameter, with a cast-steel nut that slips over the cross-head constitute the whole affair. When the nut is in the screw is simply driven down with an ordinary jack-screw bar, pressing the piston-rod on ahead of it, and forcing it out without any danger and without mutilating it in the slightest. A steel cap fits over the end of the screw, so that there is no turning of the screw against the end of the piston-rod and consequent mutilation of the center.

JACK FOR CAR INSPECTORS.

Every car inspector needs a small, light jack for occasional use, especially where it is necessary to remove brasses from the oil-boxes and similar work. The jack which we illustrate is a very simple little double-ended affair, that is made at the Reading shops for the use of the car inspectors along the road. The outside diameter of the screw is 1¼ in., and it is cut with four threads to the inch. The caps, which are also the nuts, are toothed, so that there is no danger of slipping, and the weight is reduced to the smallest possible amount by the fact that it consists merely of the two nuts and the screw itself. The working part of the screw being in the center brings it so far below the bottom of the box that it can be readily seen and operated.

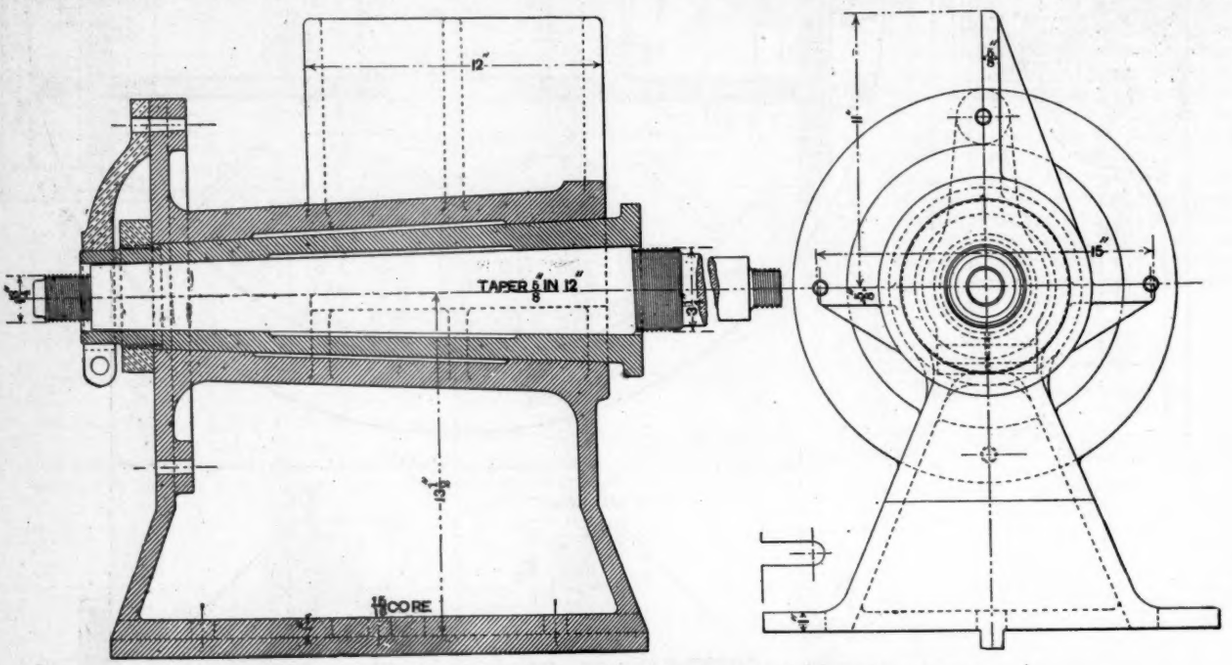

CROSS-HEAD CHUCK, READING SHOPS, PHILADELPHIA & READING RAILROAD.

CROSS-HEAD CHUCK.

Any one who has had experience with planing off cross-heads, especially where they are obliged to do it in large quantities, knows the desirability of obtaining some methods of holding them so that they can be planed true and square under all circumstances, and that the work can be readily adjusted in the machine. The chuck which we illustrate was designed at the Reading shops, and is giving most satisfactory results. In explanation of the same, it will be seen that there is a taper spindle which enters the main spindle, and is held up in position by nuts and screws, and at the outer end of this there is a taper over which the cross-head is fastened and to which it is keyed. There are two flat surfaces at right angles to each other, as shown in the illustration, which serve as the lining points for the cross-heads. When the chuck is in position these are square with the plates of the planer, and the cross-head, after being keyed into position, is turned with the spindle, so that its two faces are true with these two squares, and when it is desired to turn it 90° for the sake of planing the edges or the wearing surfaces, the whole is turned and held in position by means of pins which slip through the holes which are shown, both in the cross-section and in the rear elevation. It is strong and substantially made, and any one copying it exactly from the dimensions given will find that they have a planer tool of great value for doing this one particular class of work.

PRESIDENT HAINES, OF THE AMERICAN RAILWAY ASSOCIATION, ON THE LABOR QUESTION.

In his address before the Association, of which he is President, Mr. H. S. Haines discussed the labor question at considerable length. He suggests the incorporation of the labor unions as a means of imposing responsibility on them for the fulfilment of contracts which they might make for their members. This proposal brings a sad smile on the faces of some of us, who contended now so many years ago for the right of the men to be heard through their representatives. The indignant and often insolent refusal of some employers to "recognize" a committee of the men has probably done more than any other one thing to foment strikes. It has been observed in Europe as well as here that strikes are rare when trades unions grow rich. The members of such associations soon discover that their funds are soon dissipated by a strike, and therefore, as soon as they accumulate a large fund, they desist, or at least try to avoid strikes. Unions which indulge in the luxury of strikes don't get rich, and, conversely, those which are rich don't strike.

In his address, President Haines said:

"The proper way to adjust such differences is by agreement—by an agreement between contracting parties, competent and responsible. As to the competency and responsibility of one party—the railroad company—there is no doubt; but as to the other—the employé—he as an individual possesses neither qualification. As well stand on the river's brink and seek to enter into an agreement with the current swiftly flowing by, a constant succession of drops of water, as to make a contract with a changing force of men, coming and going as each sees fit.

"The very organizations which they have made for self-protection may be made the means for enforcing their contract obligations. To this end they should be duly incorporated under such restrictions as will insure their legal competency to contract on behalf of their members. The responsibility for keeping these contracts will then rest with their incorporated organizations, which can, by assessment, accumulate a fund that can be invested safely where it can be reached in a suit for damages for breach of contract. There will then be no voluntary arbitration, to be viewed askance by Bench and Bar, but the same legal procedure will be available to secure an observance of contract relations between railroad corporations and workmen's corporations that apply to other business con-

tracts. The legal recognition of such agreement will be a great step toward the preservation of harmonious relations between the two parties and the assurance to the public of uninterrupted railroad service.

"A failure to agree upon the terms of a mutually satisfactory contract would still be possible, but only in the event that the employés of each class were able to combine in single corporations. Past experience leads us to believe that this could not be done; that either from personal ambition or from other causes there would be independent corporations of workingmen that would compete for contracts with desirable railroad corporations, and that in this way it would always be practicable to arrive at an agreement with one or another."

HOISTING TUB OF THE DELAWARE & HUDSON CANAL COMPANY'S RAILROAD.

AMONG the useful hydraulic tools which we have been illustrating from the Delaware & Hudson Canal Company's Road, is this hydraulic jack or hydraulic tub, as it is called in local parlance, for use in hoisting cars. It consists of a boiler-plate shell riveted up with a butt joint so that the interior is smooth. The piston is made with a long leather packing, as shown in the engraving, and the bottom has an opening into which a ¾-in. pipe is screwed. The outer end of this pipe has a hose connection, which may be connected with the hose leading to the hydraulic pressure pipes which are carried all over the shop. When a car is to be hoisted one of these tubs is rolled along the floor like a barrel and put into position. The oak piston is dropped into the tub and water admitted from the lower side. With this arrangement there is a hoist of about 18 in., and inasmuch as the base of the tub is nearly 18 in. in diameter, and the bearing on the top of the plug against the car is 11 in. in diameter, there is a steady support, and when the car is up and off the wheels there is no necessity for

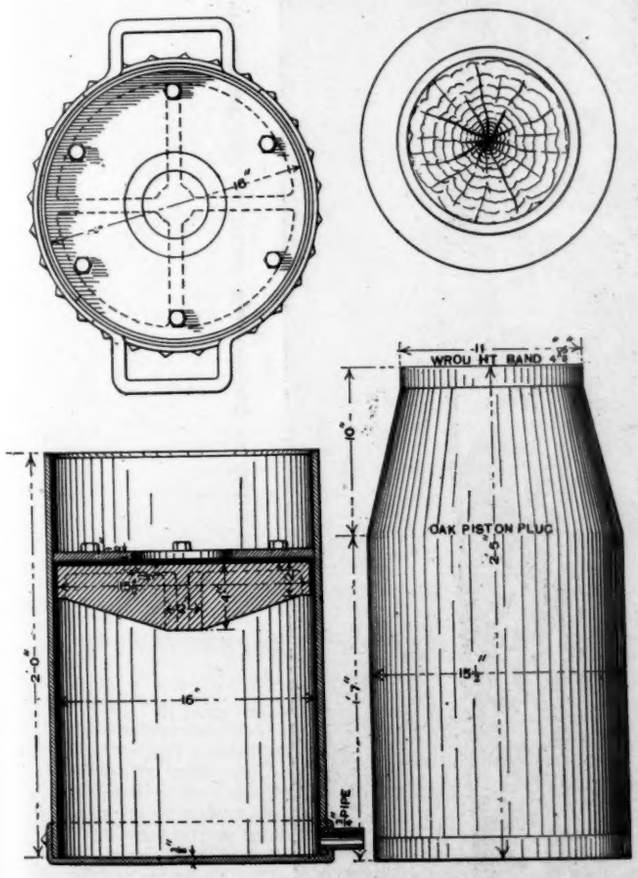

HOISTING TUB, DELAWARE & HUDSON CANAL COMPANY'S RAILROAD.

any bracings. There are a number of these scattered around the shop, and they are used exclusively instead of hydraulic jacks. Of course when a car is ready and the supply of tubs falls short, the car is simply lowered upon a horse and the tubs rolled away to be used in another place. The cheapness and effectiveness of this little convenience will certainly recommend it to all who have an hydraulic power available. The pressure which is used under these tubs runs from 40 to 50 lbs. per square inch.

VALVE-ROD GUIDE, DELAWARE, LACKAWANNA & WESTERN RAILROAD.

WE illustrate a form of valve-rod guide which is being introduced upon a number of engines of the Delaware, Lacka-

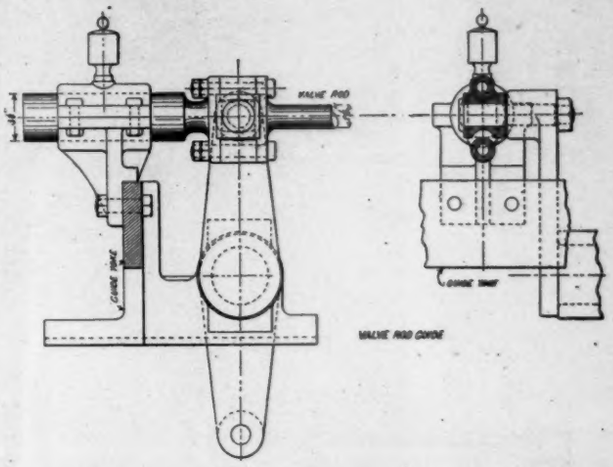

wanna & Western Railroad, by Mr. David Brown, who is Master Mechanic at the Scranton shops. Every one has experienced the difficulty which appears with the use of the valve rod rigidly attached to the rocker-arm as it is ordinarily applied. The vertical motion of the arm causes a spring to the rod, and this of course has a wearing effect upon the packing, causing it to blow.

The arrangement which Mr. Brown has designed is old in theory and has been applied in one form or another to locomotives before, but the particular arrangement which he uses is very simple and compact, and is giving such excellent results that we reproduce the drawings from which the work was made. The rocker-arm is made in the usual way, and with the pin of identically the same shape as that which is used for the ordinary valve stem. The valve stem terminates, however, in a yoke, and has an extension rod which is 3¼ in. in diameter for a 1¼-in. rod. This extension passes through a bearing which is bolted to the guide yoke and holds the rod rigidly in a horizontal position. The rocker pin at the end of the upper arm passes through a brass box which slides up and down in the yoke on the valve stem, so that the rod is given a plain horizontal direction and the slight vertical motion of the upper end of the arm is taken up by the sliding of the brass box in this yoke. The box is made solid and is slipped over the pin. The wear of the box can very readily be taken up by planing off metal or removing liners from the yoke, the same as is done with links.

THE CORINTH CANAL.

IN reporting the opening of this canal in August last, our Consul at Athens gives the following interesting particulars about this great work:

"The feasibility of piercing the Isthmus of Corinth by a canal was conceived six hundred years before the Christian era.

"It was Nero who came nearer to effecting the modern realization than any other of the ancients. In the year 67 he put 6,000 Jewish prisoners and other laborers at work upon the isthmus. These were directed with so much zeal and energy that the successful termination of the task was in sight from its very beginning. But a revolt against Nero followed soon after, ending in the death of the tyrant and the abandonment of his projects.

"In 1881 General Türr was granted by the Greek Government the concession of digging a canal through the Isthmus of Corinth. The aid of French capital was enlisted, and the modern canal was begun over the route chosen by Nero. As General Türr himself says:

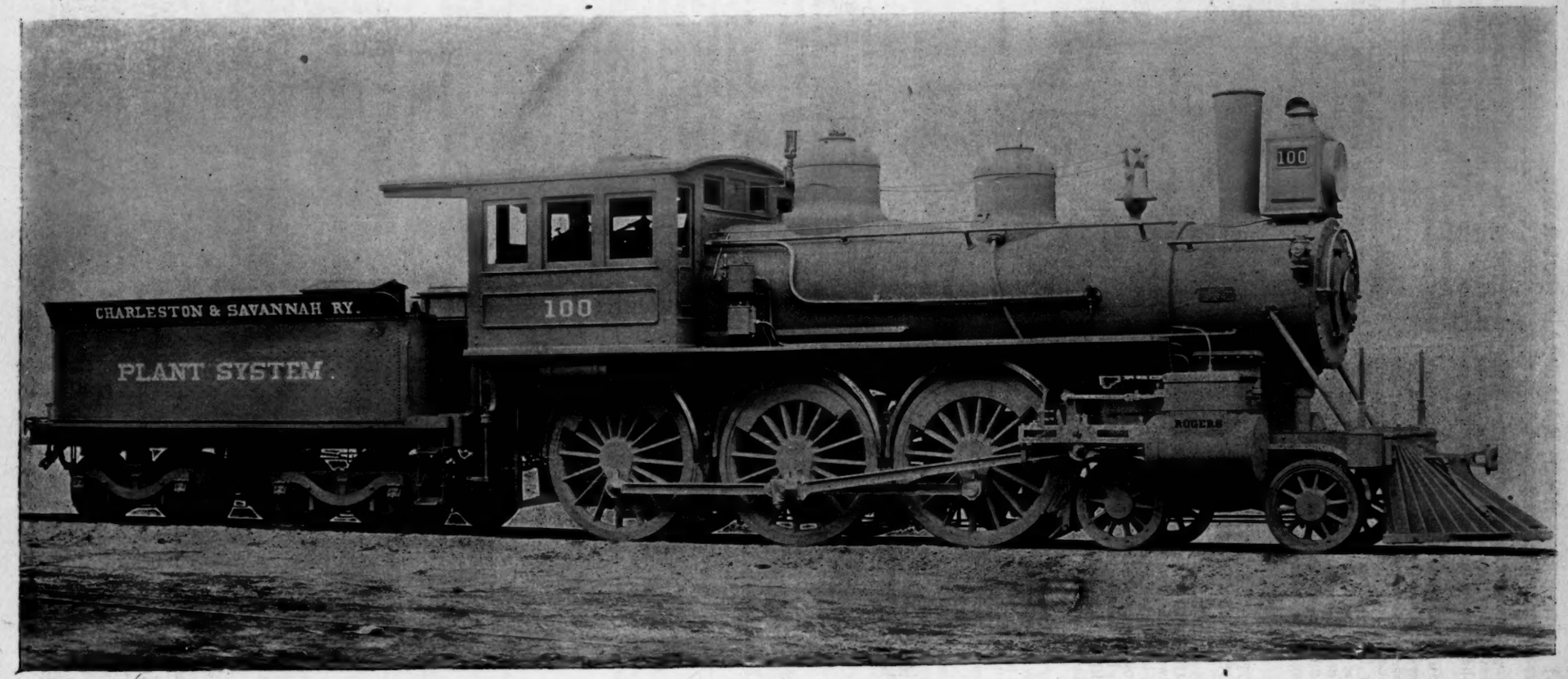

TEN-WHEELED LOCOMOTIVE. BUILT BY THE ROGERS LOCOMOTIVE COMPANY, PATERSON, N. J.

"'It is the canal commenced by Nero and abandoned during eighteen centuries that we have finished to-day, in accordance with conditions and dimensions suitable to modern navigation.'

"The original company which General Türr organized passed out of existence, and another one was formed by him. The capital of the present company is 5,000,000 francs, divided into 10,000 shares of 500 francs each. It is estimated that the annual transit through the canal will amount to 4,500,000 tons, paying one franc from the Adriatic and 50 centimes from elsewhere; one franc will be charged for each person. The canal is 6,540 meters long, 21 meters wide at the bottom and 21.6 meters at the surface, and 8 meters deep. The lease extends for 99 years, and at its expiration the canal becomes the property of the Greek Government on the payment of 5,000,000 francs to the company.

"The Corinth Canal will abridge by 185 nautical miles the route of vessels from the Adriatic bound for Constantinople, and will effect a saving of 95 miles in the case of vessels from Mediterranean ports. It will obviate the necessity of making the dangerous passage around Cape Matapan, and is expected greatly to facilitate commerce between Europe and the East. Austrian commerce, and chiefly the port of Trieste, will profit by it."

the other end. This bar, it will be seen, is bent so as to clear the front driving-axle, which comes between the link and the rocker. The back end of the radius bar next to the link is suspended by two pendulum bars or links, shown clearly in the side view, fig. 1, and in the end view, fig. 2. From the plan, fig. 3, it will be seen that the back end of the radius bar is off-set and is attached to the link-block on one side, just as the lower rocker-arm usually is. The link is then suspended on the opposite side in the usual way.

The following are the principal dimensions and weights of this engine:

Weight of engine in working order	133,000	lbs.
" on driving-wheels " "	98,500	"
" of tender " "	80,000	"
Total wheel base of engine and tender	52 ft. 2	in.
" " " "	24 ft. 8	in.
" driving wheel-base	13 ft. 6	in.
Diameter of cylinders	19	in.
Stroke of pistons	24	in.
Diameter of driving wheels	72½	in.
Total heating surface	1,968	sq. ft.
Heating surface in tubes	1,815	" "
" " " fire-box	153	" "
Grate area	31.38	sq. ft.
Steam pressure per square inch	170	lbs.
Water capacity of tank	3,500	galls.
Coal capacity	7	tons.

Fig. 3.

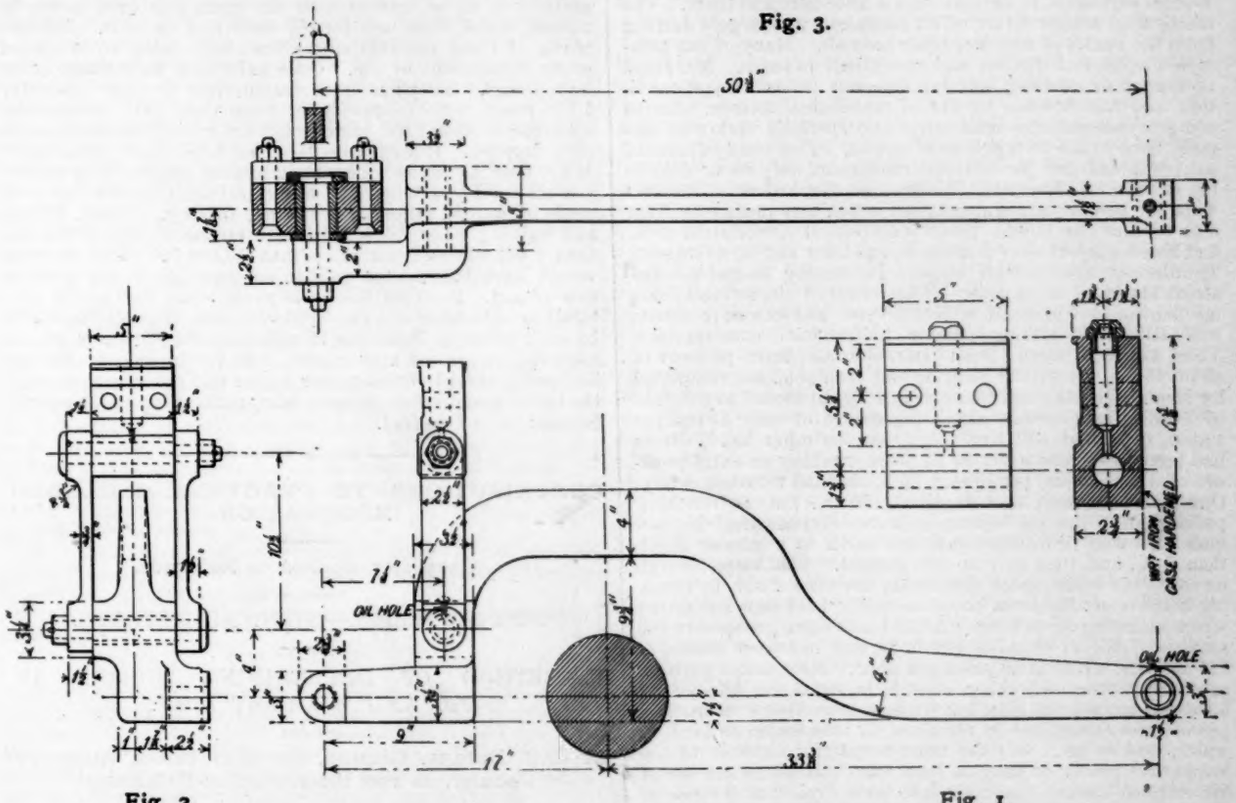

Fig. 2. Fig. 1.

DETAILS OF VALVE GEAR OF TEN-WHEELED PASSENGER LOCOMOTIVE, BY THE ROGERS LOCOMOTIVE COMPANY.

TEN-WHEELED PASSENGER LOCOMOTIVE.

THE full page engraving herewith represents one of the locomotives exhibited by the Rogers Locomotive Company at the Chicago Exhibition. It is an excellent example of a type of heavy passenger engines which of late years have been adopted on lines on which train loads have grown beyond the capacity of eight-wheeled engines.

The fire-box is intended for burning bituminous coal, and is placed on top of the frames, the crown-sheet being stayed with radial stays. The springs are underhung.

On a 10-wheeled engine of this kind there is always more or less difficulty in connecting the links with the rocker-shafts. This has been overcome by a very neat design of the various parts of the valve-gear. Separate engravings of these parts are given which show very clearly how they are constructed. Fig. 1 is a side view of one of the radius bars, which is connected to the rocker at its right-hand end and to the link by

MECHANICAL SCIENCE.

IN an address delivered recently before the Mechanical Section of the British Association by Mr. Jeremiah Head, the President of that section, he attempted to show that mechanical science is largely indebted to mechanisms as they exist in nature, if not for its origin, at all events, for much of its progress hitherto, and that nature must still be our guide.

Mechanical science, he said, had been built up entirely upon observation and experiment and the natural laws which had been induced therefrom by man. Many if not most animals could be taught to use mechanisms if carefully trained from

infancy. Thus the well-known donkey at Carisbrooke Castle drew water from a deep well by a treadmill arrangement just as well as a man could do it. He had seen a canary gradually lift from a little well, situated a foot below its perch, a thimbleful of water by pulling up with its beak, bit by bit, a little chain attached to it, and securing each length lifted with its foot till it could take another pull. When the thimble reached its perch level the bird took a drink, and then let it fall back into the well. Mr. C. Wood, of Middlesbrough, informed him that certain crows which frequented oyster-beds on the coast of India waited until the receding tide uncovered the oysters, which still remained open for a time. A crow would then put a pebble inside one, and, having thus gagged it and secured his own safety, would proceed to pick it out and eat it at leisure. A monkey would crack a nut between two stones, and would hurl missiles at his enemies. But in some countries he was systematically entrapped by tying to a tree a hollow gourd containing rice, and having a hole large enough for his hand, but too small for his clenched fist, to pass through. He climbed the tree and grasped the rice, and remained there till taken, being too greedy and not having sufficient sense to let go the rice and withdraw his hand. All animals were in their bodily frames, and in the intricate processes and functions which went on continuously therein, mechanisms of so elaborate a kind that we could only look and wonder and strive to imitate them a little here and there. The mechanical nomenclature of all languages was largely derived from the bodies of men and other animals. Many of our principal mechanical devices had pre-existed in them. Mr. Head proceeded to consider how far man was in his natural condition, and had become by aid of mechanical science, able to compete successfully with other and specially endowed animals, each in his own sphere of action. The bodily frame of man was adapted for life and movement only on or near to the surface of the earth. Without mechanical aids he could walk for several hours at a speed which was ordinarily from 3 to 4 miles per hour. Under exceptional circumstances he had accomplished over 8 miles in one hour and an average of 2¼ miles per hour for 141 hours. In running he had covered about 11½ miles in an hour. The power of the living human mechanism to withstand widely diverse and excessive strains was altogether unapproachable in artificial constructions. Thus, although fitted for an external atmospheric pressure of about 15 lbs. per square inch, he had been able, as exemplified by Messrs. Glaisher and Coxwell in 1862, to ascend to a height of 7 miles and breathe air at a pressure of only 3½ lbs. per square inch, and still live. And, on the other hand, divers had been down into water 80 ft. deep, entailing an extra pressure of about 36 lbs. per square inch, and had returned safely. One had even been to a depth of 150 ft., but the resulting pressure of 67 lbs. per square inch cost him his life. No animal burrowed downward into the earth to a greater depth than 8 ft., and then only in dry ground. The horse, though he could not walk faster than man, nor exceed him in jumping heights or distances, could certainly beat him altogether when galloping or trotting. A mile had been galloped in 103 seconds, equal to 35 miles per hour, and had been trotted in 124 seconds, equal to 29 miles per hour. How man's position as a competitor with other animals in speed was affected by his use of mechanical aids, but without any extraneous motive-power, was considered in reference to locomotion on land, in water, and in air. But the most wonderful increase to the locomotive power of man on land was obtained by the use of the modern cycle. One mile had been cycled at the rate of 27.1 miles per hour, 50 at 20, 100 at 16.6, 388 at 12.5, and 900 at 12.43 miles per hour. Unaided by mechanism man had shown himself able to swim for short distances at the rate of three, and long distances (22 miles) at the rate of 1 mile per hour. He had also given instances of being able to remain under water for 4½ minutes. Credible eye-witnesses stated that porpoises easily overtook and kept pace with a steamer going 12½ knots, or, say, over 14 miles per hour, for an indefinite length of time. This was five and 15 times the *maximum* swimming speed of a man for short and long distances respectively. The fastest mechanism of any size, animal or man-made, which had ever cut its way through the waters for any considerable distance, was the torpedo-boat *Ariete*, made by Messrs. Thornycroft & Son, of London, in 1887. By inventing and utilizing mechanical contrivances, entirely independent of his own bodily strength, man could now pass over the surface of the waters at the rate of over 500 knots per day, and at the same time retain the comforts and conveniences of life as though he were on shore. He had in this way beaten the natural and specially fitted denizens of the deep in their own element, as regarded speed and continuity of effort. But he was still behind them as to safety. We did not find that fishes or aquatic mammals often perished in numbers as man did by collisions in fogs, or by being cast on lee shores and rocks by stress of weather. Should we ever arrive at the point of making ocean traveling absolutely safe? In one way the chances of serious disaster had been of late largely diminished, and here, again, nature had been our teacher. The bodies of all animals except the very lowest were symmetrically formed on either side of a central longitudinal plane. Each important limb was in duplicate, and if one side was wounded the other could still act. The serpent, having no limbs whatever, would seem at first sight to be terribly handicapped; yet, in the language of the late Professor Owen, "it can out-climb the monkey, out-swim the fish, out-leap the jerboa, and, suddenly loosing the close coils of its crouching spiral, it can spring into the air and seize the bird on the wing." Here we had the spiral spring in nature before it was devised by man.

The decisive victories which in modern times man had gained over matter and over other animals had been due to his use of power derived from other than animal sources. That power had invariably proceeded from the combustion and the destruction of fuel, the accumulations of which in the earth were necessarily limited. Mechanical appliances, involving the consumption of fuel, had for a century at least been multiplying with alarming rapidity. Our minds had been set mainly on enlarging the uses and conveniences of man, and scarcely at all on economizing the great sources of power in nature, which were now for the most part its fuels. Terrible waste of these valuable stores was daily going on in almost every department of use. Once exhausted they could never be replaced. They had been drawn upon to some extent for 1,000 years, and extensively for more than 100. Authorities said that another 1,000 years would exhaust all the more accessible supplies. But suppose they last 5,000 years, what then? Why, then, as far as we could at present see, our only motive powers would be wind and water and animals, and our only mode of transit, sailing and rowing, driving, cycling, riding, and walking. Sir Robert Ball had estimated that in not less than 5,000,000 and not more than 10,000,000 years the sun would have become too cold to support life of any kind on this planet. Between the 5,000 years when fuel would certainly be exhausted and the 5,000,000 years when all life might be extinguished, there would still be 4,995,000 years when, according to present appearances, man would have to give up his hardly earned victories over matter and other animals, and the latter would again surpass him, each in its own element, because he had no fuel.

CONTRIBUTIONS TO PRACTICAL RAILROAD INFORMATION.

Chemistry Applied to Railroads.

SECOND SERIES.—CHEMICAL METHODS.

V.—METHOD OF DETERMINING SULPHUR IN PIG AND WROUGHT IRON.

By C. B. Dudley, Chemist, and F. N. Pease, Assistant Chemist, of the Pennsylvania Railroad.

(Copyright, 1891, by C. B. Dudley and F. N. Pease.)

(*Continued from page 445, Volume LXVII.*)

OPERATION.

Put 5 grams of the borings into a beaker whose bottom is about 3 in. in diameter, add 40 c.c. of concentrated C. P. nitric acid, and cover with a watch glass. If action takes place immediately with foaming, put the beaker in cold water until the action is modified somewhat. If action does not start at once after addition of acid, warm to start the action, and then, if necessary, put the beaker in cold water until the violence of the action has passed. As soon as quiet action is obtained, add about half a gram of pulverized chlorate of potash, keeping the beaker still covered, and put on the steam table. After all effervescence has ceased, set the cover up on a glass triangle and evaporate to remove free nitric acid until the material in the beaker will no longer adhere to a glass rod. Remove now from the steam table, allow to cool, and add 30 c.c. of concentrated C. P. hydrochloric acid, cover the beaker with a watch

glass, and heat until solution is complete, and then set the cover up as before and evaporate to dryness to render silica insoluble. A temperature not below 250° F. should be used, and the drying should be continued until only faint odor of HCl. is perceptible. Allow to cool and then add 20 c.c. concentrated C. P. hydrochloric acid, heat covered until solution is complete, and then evaporate the free acid until a skin begins to form over the top of the material in the beaker. As soon as this skin appears, add 5 c.c. concentrated C. P. hydrochloric acid and 25 c.c. of water, heat to boiling to insure solution, filter, and wash with water until the filtrate and washings amount to 100 c.c. Add now to the filtrate 10 c.c. barium chloride solution, heat to boiling to granulate the precipitate, then remove from the heat, allow to cool slightly, and add 100 c.c. of 95 per cent. alcohol. Stir thoroughly, cover with a watch glass and allow to settle until the solution is clear. Filter through a 7 centimeter filter, wash with hot water until the washings no longer react for chlorine with silver nitrate, transfer the wet filter with the barium sulphate on it to a weighed half-ounce platinum crucible, "smoke off" the filter, ignite and weigh. Add now to the crucible about half a gram of C. P. carbonate of soda and a crumb of C. P. nitrate of potash about the size of half a kernel of wheat, and fuse with the cover on until the material in the crucible is quiet. Treat the material in the crucible with hot water and wash out into a small beaker, taking pains also to detach anything adhering to the cover. Warm or boil the liquid in the beaker to insure complete solution of the sulphate of soda, filter through a small filter, wash with hot water until a drop of the filtrate shows no reaction with turmeric paper, and then two or three filtersful more. Now cover the beaker with a watch glass, add by means of a pipette through the nose of the beaker concentrated C. P. hydrochloric acid until the liquid is just acid to litmus paper; then add three drops more of acid and 5 c.c. of barium chloride solution and bring to boiling, keeping covered to avoid loss by effervescence. Remove from the heat, allow to settle, filter, wash, ignite wet, and weigh as before described.

APPARATUS AND REAGENTS.

The apparatus required by this method presents no peculiarities and requires no especial description. Since one of the directions requires that the material shall be evaporated until a skin begins to form, it is probable that more uniform results will be obtained by different operators and in different tests if the evaporation is done with the same surface exposed in all cases. It is accordingly specified that this evaporation shall be done in a beaker whose bottom is about 3 in. in diameter.

The nitric, and hydrochloric acids, the chlorate of potash, and the carbonate, and nitrate of soda are the C. P. materials such as are obtained in the market.

The chloride of barium solution is made by adding 100 grams of the C. P. salt to 1 liter of distilled water, allowing to dissolve and filtering before use.

The alcohol is the ordinary commercial 95 per cent. material of the market.

CALCULATIONS.

Since the sulphur is 13.73 per cent. of the weight of the barium sulphate, if the weight obtained expressed in grams is multiplied by 13.73 and the product divided by 100, the quotient will be the sulphur expressed in grams. Then, since the estimation is made on 5 grams, the percentage of sulphur in the steel will be shown by removing the gram decimal point two places to the right and dividing by 5, thus:

If the weight of barium sulphate found is 0.0259 gram, the sulphur is $\frac{0.0259 \times 13.73}{100} = 0.00355$ gram, and the percentage of sulphur in the steel $\frac{0.355}{5} = 0.071$ per cent.

NOTES AND PRECAUTIONS.

This method, as will be observed, oxidizes the sulphur in the iron principally, and perhaps wholly, by means of nitric acid, converts the nitrate of iron formed into chloride by means of hydrochloric acid, separates silica by evaporation to dryness after the material is converted into chlorides, and precipitates the sulphuric acid in presence of the chloride of iron by means of barium chloride, using alcohol to effect the separation of the last traces of barium sulphate from the solution. It seems probable that the chlorate of potash, which is added principally in order to have a little alkaline base for the sulphuric acid to combine with and thus prevent possibility of loss during the evaporation to dryness, may possibly assist the oxidation of the sulphur. Furthermore, the first evaporation to expel the excess of nitric acid rarely removes it all, and the subsequent addition of hydrochloric acid to expel the nitric forms with this remnant of the nitric a little aqua regia, which may still further render the oxidation of the sulphur secure.

It is essential before making a determination that not less than two blanks should be made, using all the chemicals in the prescribed amounts and conducting the whole operation just as for a regular analysis, except that no iron is present. The weight of barium sulphate obtained as the result of these two determinations, which should not differ more than half a milligram, must be deducted from the weight of the barium sulphate obtained in the regular analysis of a wrought or pig iron. It is recommended to set aside, for use in sulphur determinations only, a bottle of each of the chemicals used in making the blanks. Of course the figures obtained will be available as long as these bottles last.

It is obvious that if the air of the laboratory is contaminated with H_2S or SO_2, or even sulphuric acid fumes from ignitions and evaporations, there will be danger of too high results from contamination of the liquid in the beaker from the two gases while the evaporations to dryness are going on, and at all times during the manipulation of the material in the open beaker from the sulphuric acid fumes. We have never proven how great this danger is, but it may possibly help to explain some anomalous results.

It will be observed that after the evaporation to dryness to render silica insoluble, it is directed to add 20 c.c. of concentrated C. P. hydrochloric acid; then this acid is evaporated until a skin forms and then 5 c.c. of concentrated C. P. hydrochloric acid is again added. This looks like unnecessary complication. The reason for this manipulation is that 20 c.c. of concentrated C. P. hydrochloric acid is about the least amount that will take up the soluble material in the beaker after evaporation to dryness. But this is too much free acid to be present when precipitating with chloride of barium; also, in order to secure uniform results, the precipitation must be done in presence of a moderately definite amount of free acid. The removal of the excess and the securing of the definite amount of free acid are believed to be more certainly accomplished by the method described than by the attempt to evaporate in a beaker to a definite volume. Moreover, in attempting to evaporate to a definite volume it not infrequently happens from local overheating, since the bottoms of all beakers are not flat, that basic or semi-basic salts are formed that will not dissolve in water. Only careless manipulation will lead to this result with the method described.

It sometimes happens that 20 c.c. of concentrated C. P. hydrochloric acid is not enough to take up everything soluble after the evaporation to dryness. In this case more acid and longer continued heating must be employed. This excess of added acid must of course be evaporated until the skin appears, as already described.

It is well known that sulphates are insoluble in alcohol, and accordingly an equal volume of alcohol is added to the chloride of iron solution to secure, if possible, a complete separation of the barium sulphate. Direct experiments show that with this manipulation about 2 milligrams more barium sulphate are obtained than if the alcohol is omitted. This is equivalent to a difference of a little over half a hundredth per cent. (0.005 per cent.). Practically the same results were obtained when one-third, one-half and two-thirds of the bulk of the solution was alcohol.

Barium sulphate is liable to be reduced during the ignition of the filter, and thus lead to slightly low results. To obviate this difficulty the filter and precipitate are put into the crucible wet, and the filter "smoked off" and then burned. The "smoking off" consists in applying the heat to the wet material in the crucible so slowly that the volatile matter of the filter passes off without ignition, free access of air being maintained at the same time. To accomplish this, fold up the wet filter and place it in the crucible. Put the crucible on the triangle, as in ordinary ignitions, and leave the cover off. Then heat the open end of the crucible slowly. The filter and precipitate gradually dry, and soon the parts of the filter in contact with the crucible begin to distill off the volatile matter at low heat, even before the whole is dry. This process goes on if the flame is properly adjusted, until in a little while everything that is volatile at a low temperature has passed away, and the precipitate, with a black envelope of carbonaceous matter, is left. When this is the case the temperature can be raised, the lamp moved back to heat the bottom of the crucible, and the carbon burned off completely. Usually when the temperature is raised the black envelope of carbonaceous matter falls away from the precipitate and is rapidly consumed. By this method of ignition the material is a little longer time in the crucible than with the old method of previ-

ously dried precipitates, but the danger of reducing the precipitate is believed to be very much diminished.

It will be observed that directions are given to weigh before the barium sulphate is purified by fusion with carbonate of soda. This may seem unnecessary manipulation, but it is believed that this check on serious error arising during the fusion and subsequent operations is worth all it costs. If the manipulation as described is carefully followed, if the amount of barium sulphate is not large, and especially if it shows no tinge of color after the first ignition, the amount of barium sulphate obtained after the fusion differs so little from the first weight that the error can be ignored, and the question fairly arises whether the fusion may not in general be omitted. On the other hand, if the ignited barium sulphate is colored, showing presence of iron, or if the "smoking off" of the filter is carelessly managed, resulting in reduction of some of the barium sulphate, quite serious errors may result from omitting the fusion. Also if the silica is not all rendered insoluble by the evaporation to dryness, some of it may appear with the barium sulphate on the first weight. By far the largest portion of this is removed by the fusion, so that when the highest accuracy is required the fusion should not be omitted. The addition of the little crumb of potassium nitrate to the fusion is to ensure the oxidation of any reduced barium sulphate which may have been formed while "smoking off" the filter.

The examination of a number of samples of the graphitic residue and silica obtained as the result of the first filtration shows only traces of sulphur in this residue, and it is questionable whether even these traces did not come from the gas flame used in burning off the graphite.

PROGRESS IN FLYING MACHINES.

By O. Chanute, C.E.

(*Continued from page 535.*)

The Conference on Aerial Navigation in Chicago in August, 1893, brought out a number of experimenters whose ventures had theretofore been unpublished.

One of these, Mr. *E. C. Huffaker*, of Tennessee, had been experimenting with a model somewhat resembling the "effigy" of Mr. *Lancaster*. It consisted in a rectangular surface of fabric made concavo-convex by a rigid front spar with curved ribs at right angles thereto, so as to resemble the cross section of a soaring bird's wing. A cross stick attached thereto carried a balancing horizontal tail, the center of gravity being determined at the front by loading with lead. The area of sustaining surface was 2 sq. ft., and when held by the cross stick at arm's length overhead, vibrating between two fingers and facing a wind of 35 miles per hour (6 lbs. pressure at right angles), the weight sustained (or lift) was estimated at 2 lbs. to the square foot, or that corresponding to an angle of 10° upon a flat plane, while in point of fact the model seemed to be horizontal, and the force required to hold it in the wind was very small.

When the model was let go in a steady breeze it would rise to a height of 12 or 15 ft., slowly retreating from the wind, but always facing it; then, tipping slightly forward, it would descend into the face of the wind; all these effects being easily explained in a horizontal current.

When projected forward by hand, the model would sail away in steady flight with a velocity of about 17 miles per hour, and then descend on a gradient of about 1 in 15. If thrust rapidly forward it would rise some 8 or 10 ft., and then, hanging suspended for a moment, it sailed forward to the ground.

These experiments are interesting as confirming what has hitherto been said concerning the greater lift appertaining to concavo-convex surfaces, and it is to be hoped that they will be continued.

The other experimenter was Mr. *J. J. Montgomery*, of California. He had, some years previously, constructed a soaring apparatus, consisting of two wings, each 10 ft. long by an average width of 4½ ft., united together by a framework to which a seat was suspended, and provided with a horizontal tail which could be elevated or depressed by pulleys. The wings were arched beneath, like those of a gull, and afforded a sustaining area of about 90 sq. ft. The weight of the apparatus was 40 lbs., and that of the experimenter some 130 lbs. more.

Mr. *Montgomery* took this apparatus to the top of a hill nearly a mile long, which gradually sloped at an angle of about 10°, and placing himself within the central framework, the rods of which he grasped with each hand, ready to sit down, he faced a sea breeze steadily blowing from 8 to 12 miles an hour, and gave a jump into the air without previous running.

He found himself at once launched upon the wind, and glided gently forward, almost horizontally at first, and then descended to the ground, finding that he could meanwhile direct his course by leaning to one side or the other. The total distance glided was about 100 ft., and the sensation was that of firm yet yielding and soft support, being quite similar to the experience of M. *Mouillard*, as already described, except that there was no apprehension of disaster.

Mr. *Montgomery* carried his machine back to the top of the hill and prepared to repeat the experiment, but as soon as he got into position the apparatus began to sway and to twist about in the wind; one side dipped downward, caught on a small shrub, and, as quick as a flash, the operator was tossed some 8 or 10 ft. into the air, overturned, and thrown down headlong. He fortunately fell without serious injury, and found, as soon as he recovered himself, that one side of his machine was smashed past mending.

This experience led him to design and build a second soaring apparatus, in which he endeavored to relieve undue pressure upon either side by providing a diagonal hinge in each wing, along which the rear triangle might fold back (it was restrained by a spring) and yield to a wind gust. This apparatus measured some 132 sq. ft. of sustaining surface, and weighed 45 lbs. It was not successful; several trials were made, but no effective lift could be obtained with it. This was attributed to the fact that the wings had been made true planes (flat) instead of being arched underneath as in the first machine.

So a third apparatus was designed and built. The wings were each 12 ft. long by an average width of 6 ft., and were given the cross section and front sinuosity of those of a soaring vulture. They were so built and braced as to allow rotation in a socket at the front of the frame which supported the seat. A hinged tail was added, as in the two previous trials, and the machine weighed 50 lbs.

This last apparatus proved an entire failure, as no lifting effect could be obtained from the wind, sufficient to carry the 180 lbs. it was designed to bear. Mr. *Montgomery* then turned his attention to other matters, but he has since made a more careful and complete study of the principles involved, and he expects to resume his experiments.

The foregoing pages comprise all the experiments, the result of which has been published, which the writer has been able to collate, and which he has considered of sufficient importance to be described in this account of "Progress in Flying Machines." Other important experiments are pending or in partial progress; but the designers of these have as yet given out no information for publication, and indeed could scarcely do so concerning tentative plans, subject to constant modifications.

The writer has gathered from the newspapers, accounts of some other experiments, but these seem to be so erroneously or vaguely described that no instruction could be obtained by republishing them. It has been the aim of the writer throughout to gather all the information possible, but only to publish that which was reliable and instructive.

CONCLUSION.

Having thus passed in review the various attempts which have hitherto been made to compass artificial flight, there remains the task of pointing out as briefly as possible whether and how the information gathered may be made to conduce to a possible solution of the problem of aviation.

It was thought more effective to bring out the various theories of flight, and my own views, while describing the experiments, rather than to present them in a series of abstract statements and propositions, the immediate bearing of which might not be so evident. The reader has probably reached deductions of his own; but he may also wish to know my own general conclusions, and in what manner if any the many failures which I have described can be made to subserve eventual success.

These failures have resulted from so many different causes that it is evident that many conditions must be observed. These conditions virtually each constitute a separate problem, which can probably be solved in more ways than one, and these various solutions must then be harmoniously combined in a design which shall deal with the general problem as a whole. These various conditions, or problems, as I prefer to call them, may be enumerated as follows:

1. The resistance and supporting power of air.
2. The motor, its character and its energy.

3. The instrument for obtaining propulsion.
4. The form and kind of the apparatus.
5. The extent of the sustaining surfaces.
6. The material and texture of the apparatus.
7. The maintenance of the equipoise.
8. The guidance in any desired direction.
9. The starting up under all conditions.
10. The alighting safely anywhere.

Analyzed and viewed in this way, the reader may realize how complicated is the question and how formidable are the various difficulties which are to be surmounted. And yet the scrutiny which has been made of the various experiments attempted and of the progress accomplished in flying machines enables us to perceive that many of these problems have been approximately solved, more particularly since 1889, and that a better understanding of the difficulties to be overcome has been obtained concerning several others.

1. The first problem to be considered is that pertaining to the resistance and supporting power of air. By the use of currently accepted formulæ it could not be figured out a few years ago how birds were supported in flight. Now that Professor *Langley's* experiments have confirmed many of those previously tried, we are enabled to say that the empirical formula of *Duchemin* (from which the table of "lift" and "drift" herein given was calculated) is approximately correct, and to figure out the support and the resistance with some confidence of not going far wrong.

These calculations seem to indicate that artificial flight is possible, even with planes; that very flat angles of incidence, from 2° to 5°, hitherto considered inadmissible, will be the most advantageous, and that within certain limits of hull resistance high speeds will require less power than low speeds, because they admit of obtaining support from the air at a flatter angle.

We have seen that the "drift" diminishes as the angle of incidence becomes less, that the "hull resistance" (including car, framing, braces, etc.) increases as the square of the speed, and that the skin friction is so small that it may for the present be disregarded, and we are enabled to calculate, approximately at least, the power required to obtain support in flight with planes, and to overcome the resistance, although we are not yet aware what limit will be imposed upon the size of artificial apparatus by the law that the weight will increase as the cube, while the sustaining surfaces will grow only as the square of the similar dimensions.

Moreover, the formulæ which give this promise of success were derived from experiments with plane surfaces, and we already know that concavo-convex surfaces will be still more effective, although the most favorable shapes are not yet ascertained. This statement indicates the direction in which scientific investigation and experiment should now proceed, and holds out the hope that this first problem is in a fair way of being solved.

2. The second problem—that concerning the motor to be employed—has justly been considered to be the most important and difficult of solution. It seemed hopeless to rival, with an artificial motor, the output of energy appertaining to the motor muscles of birds in proportion to their weight, which, as we have seen, there is good reason to believe develop work in ordinary flight at the rate of 1 H.P. to 20 lbs. of weight, and can for a brief period, in rising, give out energy at such rate as to represent an engine of only 5 or 6 lbs. of weight developing 1 H.P.

The writer has, on a former occasion,* passed in review the comparative weights of various classes of engines. He found that the lightest engines in use in 1890, including the generator of power, weighed 60 lbs. per H.P. for steam, 88 lbs. per H.P. for gas engines, and 130 lbs. per H.P. for electric motors. He intended to discuss the subject further in this account of "Progress in Flying Machines," but recent achievements with steam engines seem to make this unnecessary. Marine (yacht) engines have been reduced more than one half in weight; Mr. *Hargrave* has produced a steam engine weighing 10.7 lbs. per H.P.; M. *Maxim* has created one weighing but 8 lbs. per H.P., including a condenser, and other experimenters are approximating closely to the same weights.

Steam engines, therefore, seem to have been so much reduced in weight as to admit of their being employed as motors for flying machines. This may not be a final solution, for it may be that some form of gas or petroleum engine will prove to be still better adapted to aerial purposes, as indeed has been already hinted by M. *Maxim;* but in any event, his steam engine seems to be light enough to make a beginning of artificial flight, if the other problems pertaining thereto can also be solved.

* Aerial Navigation. A lecture to the students of Sibley College, 1890.

But it is possible to utilize a still lighter power, for we have seen that the wind may be availed of under favorable circumstances, and that it will furnish an extraneous motor which costs nothing and imposes no weight upon the apparatus.

Just how much power can be thus utilized cannot well be told in advance of experiment; but we have calculated that under certain supposed conditions it may be as much as some 6 H.P. for an aeroplane with 1,000 sq. ft. of sustaining surface; and we have also seen that while but few experimenters have resorted to the wind as a motor, those few have accomplished remarkable results.

3. As regards the selection of the instrument through which propulsion is to be obtained, we have seen that experiment has shown that reaction jets, whether obtained from explosives, steam, or blasts of air; that wave action; that valvular, folding or feathering paddles or vanes have all proved inferior in practical application to screw propellers or to propelling wings, and that the two latter (if we are to judge from Mr. *Hargrave's* experiments) are about equally effective. It being understood, however, that this statement refers to wings only as propelling instruments and not as sustaining surfaces. We may conclude, therefore, that the third problem may now be solved either with screws or with waving wings, as best conforms to the rest of the design.

4. This brings us, therefore, to consider the solution of the fourth and important problem of what kind or form of apparatus should be selected for sustaining the weight—whether flapping wings, screws or aeroplanes. The best measure of comparison will be the weights or number of pounds which experiment shows may be sustained per H.P. with each form, considered in connection with the weight of the construction required to make that form abundantly strong against the resulting strains. The difference between the two weights will indicate the proportion of the whole which may be devoted to the motor. It is desirable, therefore, to consider each form or kind of apparatus separately.

We do not yet know accurately how many pounds per H.P. can be sustained in horizontal flight with a bird-like apparatus of flapping wings. The toy birds which have been described support only from 6 to 20 lbs. per H.P., but this inefficiency is largely due to the undue friction of the working parts and to the abnormal head resistance of the framing in such imperfect models. The writer has estimated that in the case of a flying pigeon about 77 lbs. are sustained per H.P., but as this is partly based on conjecture, it may be an underestimate.*

Upon the whole, the writer is inclined to admit that about 100 lbs. per H.P. may be sustained with flapping wings, this including the power required both to support the weight and to overcome the head resistance. He believes, moreover, that in an artificial machine of sufficient size to sustain one man, the strength required to resist the constant reversals of strains due to the alternating motion of the wings will involve such dimensions that the weight of the apparatus and man will amount to at least ¾ of the whole, thus leaving but ¼ of the total weight which can be devoted to the motor and its adjuncts, including the fuel and supplies for the journey.

Concerning aerial screws we have abundant experimental data. *Nadar*, *Wenham* and *Frenninges* each obtained a sustaining effect of 33 lbs. per H.P.; *Dicaide* realized 26.4 lbs., and *Dahlstrom* and *Lohman* secured 37.6 and 55 lbs. per H.P., while *Renard* obtained from 17 to 48 lbs. thrust by screws rotating at various speeds, and *Moy* recorded 40 lbs. per H.P. sustained from a wind wheel with vanes of variable pitch.

These performances, however, included a certain amount of ascension, which absorbed part of the power, so that probably we shall be quite safe in assuming that in mere horizontal flight some 45 lbs. per H.P. can be sustained with screws.

As the strains in a rotating apparatus will be less destructive than those involving reversals of motion, it seems probable that screws may be constructed with a less weight of materials than flapping wings of the same sustaining power. It is judged that an apparatus can be constructed to sustain the weight of one man with rotating screws, in which only about ¾ of the weight shall be absorbed by the framing, screws, car and man, thus leaving ¼ of the whole weight for the motor and its various adjuncts. The practical result of this estimate will be elicited further on.

We have also a number of experimental data concerning aeroplanes. Professor *Langley* sustained a maximum of 200 lbs. per H.P. with planes at an angle of incidence of 3°, and M. *Maxim* sustained 133 lbs. per H.P. at an inclination of 1 in 14. These data apply to the plane only. Neither of these per-

* M. *Lilienthal* raised 93 lbs. per H.P. in his experiments, but this was counterbalanced weight, and there was no head resistance of forward flight to be overcome.

formances included the head resistance due to the framing and car which are indispensable in an actual machine, so that we must derive our premises from complete models. With one of the latter *Tatin* sustained 110 lbs.; *Phillips*, 72 lbs., and *Hargrave*, 89 lbs., 76 lbs., and 79 lbs. per H.P. in horizontal flight. We may safely conclude, therefore, that 100 lbs. per H.P. can be sustained in horizontal flight with an aeroplane.

As the latter consists of fixed surfaces receiving no strains save the sustaining pressure of the air, it is believed that such class of apparatus can be constructed of sufficient size to sustain one man, so that about one half of the whole weight shall be devoted to the apparatus and man, and the other half to the motor and its adjuncts.

These estimates of the proportion of the sustained total weight which can be spared for the motor, are necessarily mere estimates made in advance of actual testing, and (for reasons to be stated hereafter) upon the smallest size of apparatus practicable for actual man-flight, yet they enable a comparison to be made between the various forms of apparatus which have been herein described. The result is as follows:

COMPARATIVE EFFICIENCY OF VARIOUS FORMS.

Kind of Apparatus.	Pounds sustained per H.P.	Proportion available for motor.	Resulting possible weight of motor per H.P.
Screws	45	1/3	15 lbs.
Wings	100	1/4	25 "
Aeroplanes	100	1/2	50 "

The above table, based as it is upon experimental data of weights actually sustained, indicates that aeroplanes are probably the best forms to experiment with, because they admit of a larger proportion of the whole weight being appropriated to the motor. It also indicates the possibility of success in artificial flight, with motors weighing 10 or 15 lbs. per H.P., provided that the remaining problems be also solved; but it must not be overlooked that more power will be required in rising from the ground than in horizontal flight, and that the actual proportion of the total weight available for the motor, although conservatively estimated from the best data available,* is still a matter to be proved by experiment.

The common basis which has been here selected for comparison is that size of apparatus sufficient to support the weight of one man. This is the smallest which can be adopted, and it is theoretically the most favorable, for inasmuch as the weight of the framing will presumably increase as the cube of the dimensions, while the sustaining surfaces will increase as the square of these same dimensions, it is seen that the ratio of the total weight sustained which can be spared for the motor will not be constant, but that the larger the apparatus the more it will weigh in proportion to its surface and the less there will remain for the engine and its adjuncts. Flying machines, therefore, should preferably be designed as small as practicable, and experimenters will place themselves at a disadvantage if they construct large machines.

5. As regards the fifth problem—the amount of the sustaining surface required—it depends on the speed, and it is probable that, within certain limits, no particular extent (in ratio to the weight) can be said to be absolutely the best, because a large part of the resistance will consist in the "drift," and the latter is independent of the area of the sustaining surface; a small area at high speed being able to sustain as much weight as a larger area at a corresponding lesser speed, as indeed is indicated by the formula already given for the drift: $R = W \tan. @$, in which the element of surface disappears.

Practically, however, the weight of the necessary framing and the hull resistance will determine the ratio of surface to weight which will be most advantageous. We have seen that encouraging experiments have been made with surfaces varying from 0.75 sq. ft. per pound in the case of Herr *Lilienthal* to 7 sq. ft. per pound in the case of M. *Hargrave*. It seems probable that the latter is in excess, and that it would be preferable to confine the dimensions of artificial machines within the proportions which obtain with fast-flying birds, as shown in the table heretofore given, this being from 3.62 sq. ft. per pound in the case of the swallow, to 0.44 sq. ft. per pound in the case of the male duck, with which areas, if we consider their wings as planes, and the angle of incidence to be 3°, the swallow requires a speed of 23.1 miles per hour and the duck a velocity of 66.2 miles per hour to sustain their weight.

To come down safely, at the speed of the parachute, requires about the ratio of the swallow, while the proportions of the duck are more favorable to high speed. As the drift will increase only if the angle of incidence be increased, it would seem preferable to maintain this angle as uniform as possible, and to provide variable supporting surfaces to be folded or unfolded with variations of speed, if such a construction can be devised in connection with the concavo-convex surfaces which have already been mentioned as likely to give the most satisfactory results.

6. The sixth problem cannot be said to be solved, for there is considerable uncertainty concerning the best materials to be employed for the framing and for the moving parts; or what should be the texture of the sustaining surfaces in an actual flying machine. Hitherto the main question has been to construct a model which would fly at all; and experiments with models have not thrown much light on the question of materials. If a partial success be realized, this problem will assume greater importance.

It involves considering materials from a somewhat new point of view, or investigating their strength and stiffness per unit of weight, so as to secure a maximum of resistance with a minimum of weight. The quill of a bird's feather is stronger and more elastic than an equal weight of steel, and the texture of its barb is peculiar.

It now seems probable that bamboo, the lighter of the stiff woods, and some varieties of steel, will be found to be the preferable materials for the framing. Contrary to popular belief, aluminium is inferior to steel per unit of weight, particularly in compression, but it does not corrode and may be preferable on that account. It may be utilized for the sustaining surfaces, either as thin sheets or as wire gauze made smooth by some coating; but textile fabrics will probably be the first to be employed for full-sized apparatus. One important requirement, however, is that the surfaces shall not unduly change their shape under varying air pressures. They must be rigid, and, perhaps, elastic, and the fluttering of textile fabrics is likely to give trouble to experimenters. It may be, therefore, that thin wood, parchment, or pasteboard may prove preferable, the latter being corrugated lengthwise of the direction of motion in order to gain stiffness.

The barb of a feather is smooth in one direction and asperous in the other; and it is possible that a similar texture of surface may prove of advantage in flying machines, but this probably will not be determined until partial success has been achieved with an apparatus of sufficient size to sustain the weight of a man.

7. The problem of the maintenance of the equipoise is now, in my judgment, the most important and difficult of those remaining to be solved. It has been seen, from this review of "Progress in Flying Machines," that almost every failure in practical experiments has resulted from lack of equilibrium. This is the first requisite thing to secure, for, as has already been said, safety is the most important element of success—safety in starting up, in sailing, and in coming down.

If a flying machine were only required to sail at one unvarying angle of incidence in calm air, the problem would be much easier of solution. The center of gravity would be so adjusted as to coincide with the center of pressure at the particular angle of flight desired, and the speed would be kept as regular as possible; but the flying machine, like the bird, must rise and must fall, and it must encounter whirls, eddies, and gusts from the wind. The bird meets these by constantly changing his center of gravity; he is an acrobat, and balances himself by instinct; but the problem is very much more difficult for an inanimate machine, and it requires an equipoise—automatic if possible—which shall be more stable than that of the bird.

We have seen from the experiments described that the transverse stability can be procured in two ways: (1) by placing the two halves of the sustaining surfaces at a diedral angle to each other, and (2) by adding a longitudinal keel to the apparatus, as in the case of Mr. *Boynton's* fin kites. The mode of action is practically the same for both, and consists in producing increased air pressure upon the side which tends to dip downward. The two may be employed conjointly, but the keel will produce less head resistance to forward motion than the diedral angle, which resistance, however, may be diminished by turning upward only the outer ends of the sustaining surfaces in a manner similar to the upbending primary feathers of the soaring birds.

Longitudinal stability may be promoted in three ways: (1) By additional surfaces at a slight angle to the main sustaining surface, (2) by placing several surfaces behind each other, (3) by causing the center of gravity always to coincide with the center of pressure. The first way corresponds to the method which has been mentioned as procuring transverse stability by means of surfaces at a diedral angle; it is illustrated by M.

* *Maxim's* aeroplane and the soaring devices of *Le Bris*, *Mouillard*, *Lilienthal*, and *Montgomery*.

Maxim's aeroplane, in which two such surfaces are affixed, front and rear; and by M. *Pénaud's* aeroplane, in which but one is affixed in the rear. The second way is illustrated by M. *Brown's* bi-planes and by M. *Hargrave's* cellular kites; and the third is the method universally employed by the birds.

For an artificial machine this last method is as yet an unsolved problem. Several inventors have proposed methods of shifting weights to change the position of the center of gravity as the apparatus changes its angle of incidence, but none of these are automatic, and none have been tested practically.

8. The guidance in a vertical direction—*i.e.*, up or down, depends in a great degree upon success in the changing the center of gravity which has just been alluded to. It may be partly effected by changes in the speed or by horizontal rudders, but in such case the equipoise will be disturbed. Guidance in a horizontal direction has been secured, as we have seen in several experiments, by vertical rudders; but there are probably other methods still more effective, although their merits cannot be tested until a practical apparatus is experimented with. Upon the whole, this problem may give trouble, but it does not seem unsolvable.

9. A really adequate practical flying machine will hardly be said to have come into existence until it possesses the power of starting up into the air under all conditions. This problem is as yet unsolved, and may not be until the other problems have been worked out to a success. It is clear that in rising upward more power will be required than in horizontal flight; for to the force required to obtain horizontal support must be added that required to ascend, and the latter will vary with the rapidity of the upward motion. Three principal methods have been experimented with: (1) By acquiring speed and momentum on the ground; (2) by the reaction of rotating screws; (3) by utilizing the force of the wind. The first we have seen to require the use of special appliances, such as railway tracks, so that its application must be limited, and the third necessitates that the wind shall blow, and with sufficient force; either or both may be utilized with the earlier types of practical machines should one or more be hereafter developed; but the writer believes that the second method—that of rising through the reaction of a screw—will eventually supersede the two others. It will involve the difficult design of a simple form of sustaining surfaces which can be alternately rotated as a screw or held as a fixed aeroplane when sailing, the change being effected while under motion in the air.

The writer does not believe that a bird-like machine can rise into the air, under all conditions, by flapping its artificial wings. It would need to be already up some distance to permit such action. Birds spring up three or four times their own height, or run against the wind to acquire speed, and with vigorous flaps of wing they rise at an angle seldom greater than 45°, but their initial action would be quite impracticable to a machine of sufficient size to sustain the weight of a man.

10. The alighting safely anywhere is also an unsolved problem, and one, as will readily be perceived without argument, of vital consequence. It has been slurred over by most of the designers of flying machines, and the best method which has been thus far proposed involves the selection of a smooth, soft piece of ground and the alighting thereon at an acute angle. When it is considered that the speed required for support will be somewhere from 20 to 40 miles an hour, it will be realized that the performance will be somewhat dangerous, and that it would be preferable, if the design of the apparatus will admit of it, to imitate the manœuvre of the bird who stops his headway by opening his wings wide, tilting back his body, and obtaining the utmost possible pressure and retardation from the air before alighting upon the ground. This would require for an artificial machine a rapid change of the center of gravity so as to tilt the apparatus backward to the angle of maximum lift (about 36° by the table) and, immediately thereafter, a counter change of the center of gravity, so as to bring the apparatus back upon an even keel in order to alight at the diminished velocity.

This manœuvre is not as difficult and dangerous as may at first sight appear; but it must be acknowledged that it would be preferable to utilize the reaction of a rotating screw to diminish the forward motion and to hover over the ground before alighting. This involves the same difficult design which has been alluded to as desirable for use in rising, for it does not seem practicable, within the requisite limits of weight, to provide two sets of sustaining surfaces, one set to be used in rising and in alighting, and the other to serve in horizontal flight. These last two problems—the rising and the alighting safely, without special preparation of the ground—seem very difficult of solution, and are probably the last which will be worked out.

(TO BE CONCLUDED.)

ROLLING STOCK STATISTICS.

ROLLING STOCK OWNED BY THE RAILROAD COMPANIES OF THE UNITED STATES IN 1892, AS GIVEN IN THE LAST NUMBER OF "POOR'S MANUAL OF RAILROADS."

Locomotives.	Passenger Cars.	Baggage, Mail and Express Cars.	Freight Cars.	Total Cars.
35,754	26,321	7,900	1,168,867	1,203,088

ROLLING STOCK OWNED BY BRITISH RAILROAD COMPANIES ON DECEMBER 31, 1892, AS GIVEN BY A RECENT "PARLIAMENTARY RETURN."

	Locomotives.	Carriages used for the Conveyance of Passengers only.	Other Vehicles attached to Passenger Trains.	Wagons of all kinds, used for the Conveyance of Live Stock, Minerals, or General Merchandise.	Any other Carriages or Wagons used on the Railway, not included in the preceding columns.	Total Number of Vehicles of all descriptions for Conveyance of Passengers, Live Stock, Ballast, etc.
England and Wales ...	14,840*	34,052	12,127	439,109	10,913	496,201
Scotland...	1,880	4,349	1,629	120,580	1,261	127,819
Ireland.....	719	1,678	985	15,747	437	18,847
Total.....	17,439	40,079	14,741	575,436	12,611	642,867

* Including 16 electric locomotives.

THE TORSION VISCOSIMETER.

BY O. S. DOOLITTLE, CHEMIST, PHILADELPHIA & READING RAILROAD.

SEVERAL years ago Mr. S. M. Babcock called our attention in the *Journal of Analytical Chemistry* (Volume I., p. 151) to the use which could be made of the principle of the torsion balance in determining the viscosity of various liquids. The hint which was there dropped in regard to the adaptability of this principle to determining the viscosity of oils has been followed up, and in the torsion viscosimeter as it stands to-day we have but the development of that idea.

The viscosity of an oil is recognized by both the producer and consumer as the most valuable measure of its lubricating power, and yet we find no uniformity whatever in the manner of determining this essential property. There are numerous viscosimeters in use, but no one of them has commended itself to the trade sufficiently to be adopted as a standard.

The essentials of a good viscosimeter are:

1. Accuracy, including both the ability to duplicate results obtained with an oil on the same instrument, and also on different instruments of the same make.

2. Ease and rapidity of cleaning and manipulating, and the reducing of personal error to a minimum.

3. Adaptability of a single instrument to all kinds of oil, at all desirable temperatures.

The great majority of viscosimeters are built on the principle of allowing the oil to flow through an orifice, and counting the number of seconds required for a certain quantity to flow out. Instruments constructed on this plan cannot be made to conform satisfactorily to all the above requirements. As a rule it takes more time to clean and get the viscosimeters of this class ready for a test than for the test itself. If the instrument is made with great care, good duplicate results can be obtained with a perfectly clean oil, but if by any chance a slight particle of dirt gets into the oil, the orifice is liable to become obstructed and the results vitiated.

At the same time these results are but comparative, and poorly comparative at the best, as the head of oil is constantly

changing from the moment the flow begins, and the rapidity of the flow must necessarily depend more or less on the specific gravity of the oil, as we will show later on.

That the personal error is a large one will hardly be disputed by any who have worked with these instruments.

Again you will find, as a rule, several different viscosimeters with varying orifices required for the different oils, a small hole being the best for light oils and a large one for the heavy products.

Having experimented with a number of these viscosimeters in the laboratory of the Philadelphia & Reading Railroad Company, we found them so very unsatisfactory where rapid and accurate work was required, that we abandoned them all and designed an instrument on the above-mentioned principle. In the torsion viscosimeter we have an instrument which, during the year and a half we have had it in daily use, has proved itself reliable, accurate, and satisfactory in every way. It is very easy to clean and manipulate, is adapted to oils of all ranges of viscosity, and reduces personal error to a minimum.

A glance at the cut will show how the principle has been applied. A steel wire is suspended from a firm support and fastened to a stem which passes through a graduated horizontal disk, thus allowing us to measure accurately the torsion of the wire. The disk is adjusted so that the index point reads exactly *O*, thus showing that there is no torsion in the wire. A cylinder 2 in. long by 1¼ in. in diameter, having a slender stem by which to suspend it, is then immersed in the oil and fastened by a thumb-screw to the lower part of the stem of the disk. The oil-cup is surrounded by a bath of water or high fire-test oil, according to the temperature at which it is desired to take the viscosity. This temperature being obtained, while the disk is resting on its supports, the wire is twisted 360° by rotating the milled head at the top. The disk being released, the cylinder rotates in the oil by virtue of the torsion of the wire.

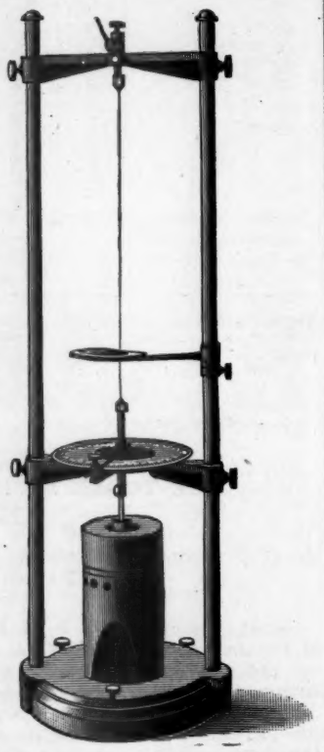

The action now observed is identical with that of the simple pendulum.

If there were no resistance to be overcome, the disk would revolve back to *O*, and the momentum thus acquired would carry it 360° in the opposite direction. What we find is, that the resistance of the oil to the rotation of the cylinder causes the revolution to fall short of 360°, and that the greater the viscosity of the oil the greater will be the resistance, and hence the retardation. We find this retardation to be a very delicate measure of the viscosity of the oil.

There are a number of ways in which this retardation may be read, but the simplest we have found to be directly in the number of degrees retardation between the first and second complete arcs covered by our rotating pendulum. For example, suppose we twist the wire 360° and release the disk so that rotation begins. In order to obtain an absolute reading to start from, which shall be independent of any slight error in adjustment, we ignore the fact that we have started from 360°, and take as our first reading the end of the first swing Ignore the next reading, which is on the other side of the *O* point, as it belongs in common to both arcs. Take the third reading, which will be at the end of the second complete arc, and on the same side of the *O* point as the first reading. The difference between these two readings will be the number of degrees retardation caused by the viscosity of the oil. Suppose the readings are as follows:

First reading,	right hand	355.6°
Second "	left hand—ignore	
Third "	right hand	338.2°
		17.4° retardation.

In order to secure freedom from error we make two tests: one by rotating the milled head to the right and the other to the left. If the instrument is in exact adjustment, these two results will be the same; but if it is slightly out the mean of the two readings will be the correct reading.

In order to overcome the variations in different instruments, each one is standardized against pure cane-sugar solutions, after the manner proposed by Mr. Babcock, and the viscosity is expressed in the number of grams of pure cane sugar contained in 100 c.c. of the syrup at 60° F., which will give the retardation designated at 80° F. These readings are obtained by making a number of solutions containing known amounts of pure cane sugar, and determining the retardation of each. A curve is then mapped out on a piece of plotting-paper, the number of grams of sugar in 100 c.c. of the different syrups representing the abscissas, and the degrees of retardation, the ordinates. This curve enables us to interpolate the value of each degree of retardation in terms of pure cane sugar, and in this way a table of viscosities is drawn up and furnished with each instrument. This table renders the results obtained by different instruments strictly comparable.

Incidentally while experimenting with these sugar solutions we have been able to show the influence which specific gravity has on the determination of viscosity when made by the class of instruments which allow the liquid to flow through an orifice and express their results in the number of seconds required.

We found the viscosity on the torsion viscosimeter of a certain oil having a sp. gr. of 0.9 to be 86.4. We then made a sugar solution showing exactly the same viscosity, and found its sp. gr. to be 1.4. These two liquids having identically the same viscosity as shown by the torsion instrument, but differing in specific gravity, were then run through the Saybolt viscosimeter. The oil required 35½ seconds, while the sugar solution ran through in 30½ seconds, thus showing that the difference in specific gravity caused an error of 5 seconds on this instrument by forcing the sugar solution through the orifice faster than the oil. To demonstrate still further the presence of this error due to specific gravity, we ascertained the viscosity of an oil having a sp. gr. of 0.9 to be 35¼ seconds on the Saybolt instrument. We then made a sugar solution which gave the same figure on this viscosimeter, showing a sp. gr. of 1.48. The viscosity of these two liquids was then taken on the torsion viscosimeter, when it was found that the oil showed a viscosity of 86.8, while the sugar solution gave 91.8. In other words, it was necessary to make a solution of sugar of decidedly higher actual viscosity than the oil, in order to overcome the error due to difference in specific gravity and show the same reading on the Saybolt viscosimeter.

From this it would seem clearly evident that the viscosity as determined by any instrument based on the principle of allowing the liquid to flow from a receptacle through an orifice, has a very appreciable error due to the specific gravity of the liquid.

The torsion viscosimeter is free from this objection and many others which belong to this class of instruments. It is applicable to all grades of oil, regardless of their character or fluidity, being independent of the gravity and of any reasonable amount of dirt the oil may contain. The viscosity of an oil can be taken at any temperature as many times as may be desired without any inconvenience from being obliged to handle the hot oil. This we think is an important point, as the practice in common use of determining the viscosity of cylinder stock at 212° F. does not tell us what we want to know. We should know the viscosity of an oil at the temperature at which it is to be used, which in the case of cylinder stock is in the vicinity of 350° F. We have repeatedly found oils tested at 212° simply reversing their comparative values when heated to 350°. We need an instrument with which the viscosity can readily be determined at a high temperature with a minimum amount of trouble. By means of a paraffine or high fire-test oil bath for our oil-cup, we have no trouble whatever in doing this with the torsion viscosimeter.

The necessity of a standard instrument which shall be recognized as such by the trade cannot be too forcibly emphasized, as the present state of affairs is very annoying to both the producer and consumer, leading, as it so often does, to misunderstanding and financial loss. The torsion viscosimeter is manufactured by Bullock & Crenshaw, Philadelphia, Pa.

A PROPOSED UNIFORM SYSTEM OF SCREW-THREADS FOR FRANCE.

In France there is no standard system of screw-threads adopted in engineering construction, but the greatest diversity exists between the threads of screws having the same diameter

In the large military, naval, and railway workshops special systems have been adopted, which, however, differ one from the other, so that it is very rare to find two screws of the same diameter (taken at random) having the same pitch and form of thread. A commission was appointed by the society to consider the best means of arriving at a uniform system of screw-threads.

The report contains details of the various systems of screw-threads in use—Whitworth, Sellers, and eight special systems used in France, as well as some systems that have been from time to time proposed as standards.

In a form of screw-thread recommended for adoption as standard, ease of manufacture is of great importance. The form recommended has as its basis an equilateral triangle, whose side is equal to the pitch, one-eighth part of the height of the triangle being cut off at top and bottom, parallel to the axis of the screw. There are 20 principal sizes of screws, denoted by the numbers, 0, 1, 2, 3, . . . 19.

The pitch of the screw, p, the diameter of the screw, D, and the width of the nut across the flats l in millimeters are given by the formulas:

$$p = \frac{n}{2} + 1$$

$$D = \frac{(n+10)^2}{5} - 14$$

$$l = 3n + 5 + D.$$

The following table gives the sizes of the principal screws; the number 0 (corresponding to $D = 6$ mm.), the inferior limit of the series, being the same as the superior limit in the Thury standard system in general use for watch and clock screws.

If a screw of intermediate diameter is required, it should be expressed in millimeters by a whole number, and the pitch taken the same as that of the principal screw of immediately smaller diameter.

n.	p.		D.		l.	
	Mm.	Ins.	Mm.	Ins.	Mm.	Ins.
0	1.0	0.04	6	0.24	10	0.39
1	1.5	0.06	10	0 39	20	0.79
2	2.0	0.08	15	0.59	25	0.98
3	2.5	0.10	20	0.79	35	1.37
4	3.0	0.12	25	0.98	40	1.58
5	3.5	0.14	31	1.22	50	1.97
6	4.0	0.16	37	1.46	60	2.36
7	4.5	0.18	44	1.73	70	2.76
8	5.0	0.20	51	2.01	80	3.15
9	5.5	0.22	58	2.28	90	3.54
10	6.0	0.24	66	2.60	100	3.94
11	6 5	0 26	74	2.91	110	4 33
12	7.0	0.28	83	3.27	125	4.92
13	7.5	0 30	92	3.62	135	5.31
14	8.0	0 31	101	3.98	150	5 90
15	8.5	0.33	111	4.37	160	6.30
16	9.0	0 35	121	4.76	175	6.89
17	9.5	0.37	132	5.20	190	7.48
18	10.0	0.39	143	5.63	200	7.88
19	10.5	0.41	154	6.06	215	8.46

A memoir by Mr. Marre, of the firm Bariquand & Marre, on the "Manufacture of Triangular Screw-Threads" is appended to the report. A tool and holder is described, the arrangement being such that the form of the thread produced is not altered by grinding the tool.

A note on the unification of screw-gauges is appended. This note gives tables of the principal gauges used in England, America and France.

The commission recommend that 5,000 copies of their report be distributed among persons interested in the subject—engineers of the State technical societies, railway and shipping companies, etc —with a view to elicit a general discussion and prepare the way for the adoption of a uniform system.—*Bulletin de la Société d'Encouragement pour l'Industrie Nationale.*

THE GOVERNMENT NEW LOCATION FOR THE RAILROAD ACROSS THE MAIN CAUCASUS RANGE.

By A. Zdziarski, C.E.

The Transcaucasian Railroad, finished in 1881, and connecting the two ports of the Black Sea—Poti and Batoum—with the Bakou and its oil (petroleum) region on the Caspian Sea, serves the local traffic of the Transcaucasian country and the transit between Europe and Persia, but is quite separated from the railroad system of the Russian Empire.

The great Caucasus range, in its whole length from the Black to the Caspian Sea, is an impassable impediment for any communication between the Russian Empire and the Transcaucasus. Therefore soon after the conquest of that country the Russian Government had in view the necessity of creating a communication, and the result of that has been the construction of the Military Grouzin Highway (Chaussée), the single continental road which now connects the Russian Empire with the Transcaucasus.

Of course one road (Chaussée) could not long satisfy the increasing requirements of communication and traffic; and in 1873 Mr. Statkowski, C.E., was commissioned to execute the surveys and location of a railroad across the great Caucasian range in order to connect the Northern Caucasus with the Transcaucasus.

The line of first location was laid along the Military Grouzin Road—it is along the two principal rivers flowing from the summit of the range, the Terek, on the northern slope, and the Great or White Aragva, on the southern slope, and provided for a tunnel under the Krestovsk Pass. A variation of line was located along the Tsno River, a tributary of the Terek, and Black Aragva, a tributary of the Great Aragva, but did not present any important advantages. These lines are indicated on the map by "L., 1873."

In the year 1875 Mr. Statkowski made new surveys and located a new line between Gori, on the Transcaucasian Railroad, and Dar-kokh, on the Vladikavkaz Railroad, along the valleys of Lakhva and Ardon rivers, through the Djomag, or Mag, Pass. This location was found more easy and economical than the previous one, and is designated "Loc., 1875" on the map.

Another proposition was made by the Vladikavkaz Railroad Company to construct a long loop line *via* Petrovsk and Bakou; but this line would increase the distance between the empire and the center of Transcaucasus about 1,000 versts (666 miles), and, however profitable for local traffic, could not be considered as a main line.

In 1890 the question of a railroad through the Caucasus range came up again, and the committee of ministers decided to order surveys and final location of this line, Mr. Rydzewski, C.E., being appointed as a Chief Engineer.

PRELIMINARY RECONNOISSANCES.

The railroad to be located was intended to connect the Vladikavkaz Railroad and the Transcaucasian Railroad, and therefore it must pass across the central part of the range. There are here the five following passes (going from the west): (1) Mamison, 9,390 ft. high on sea level, and dividing the sources of the Rion and Ardon; (2) the Djomag (or Mag) Pass, 9,842 ft. high, dividing the sources of the Lakhva and Ardon; (3) the Krestovsk, 7,977 ft. high, dividing the sources of Great Aragva and Terek; (4) the Bouslachirsk, 8,088 ft. high, dividing the sources of Black Aragva and Tsno, and (5) the Arkhot, 9,700 ft. high, dividing the sources of Khevsara-Aragva and Assa.

From these five passes, the first (Mamison) was found to be situated too far to the westward; the three following were explored by Mr. Statkovski, and only one of them—the Djomag Pass—was found suitable; the last pass (Arkhot) has been explored and surveyed since then.

Before describing the results of surveys, some general observations on the location of mountain railways will be of some interest.

There are two systems of locating a railway in a mountainous country with one or more expected tunnels—viz., the *high* location and the *low* location. In the high location the line begins to rise from the middle of the valley, where the slope of the valley is less than the maximum slope of grading, so that, by rising with the maximum slope of grading, the line in the upper end of the valley reaches the appointed entrance to the main tunnel. In the low location the line is laid as low as possible, and in the upper end of the valley, in order to keep the maximum slope and reach the tunnel entrance, the line must be lengthened by means of going in lateral valleys and by means of spiral tunnels.

When the construction of long tunnels was still very difficult, the high location prevailed. The Semmering Railroad and Brenner Railroad were constructed in this way. But when the construction of the Mont Cenis Tunnel developed the new improvements in tunnel construction, then the low location, being more economical, began to be applied, and the St. Gothard Railroad and the Arlberg Railroad were built in that way.

The chief advantages of low location are the following: It is more easy for construction and operation, going near to the bottom of the valley; the crossing of lateral valleys is more light, and the crossing of the main valleys is also quite possi-

ble; there are fewer snow avalanches to be met; the construction and the carrying of materials is lighter; the permanent bridges are cheaper.*

The greatest height at which the operating of the railroad is possible in the Caucasus Mountains, according to the scanty meteorological observations and the opinion of General Chodzko, was adopted —4,500–5,000 ft. It is not a great deal higher than in the Alpian country, where the highest point of railroads are: St. Gothard Railroad, 3,758 ft.; Arlberg Railroad, 4,299 ft.; and Brenner Railroad, 4,485 ft.

The minimum height at which the tunnel can be projected depends upon the distribution of the temperature in the range. This temperature increases going inside, and at the level of the tunnel it will be no more than + 35° C.; the working at a higher temperature being impossible without artificial cooling of air, and this is very costly. The value of one geothermical grade (the depth at which the temperatures increases 1° C.) was computed from the practice of the Souram Tunnel, where the mean temperature was 15 — 16°. As the height of range over the tunnel was 366.39 meters, the mean yearly temperature + 8°, therefore the geothermical grade $= \frac{366.39 - 8.53}{16 - 8}$ = 44.73. (Here 8.53 is the depth of the layer under which the temperature is constant.) The height of Arkhot Pass is 9,700 ft. = 2,956 m., the mean temperature + 3°; therefore the depression of the tunnel above the pass can be (35° — 3°) 44.73 = 1,431 m., and the minimum height of the tunnel 2,956 — 1,431 = 1,525 m. = 5,003 ft. The same result can be verified by the formula of Stampf, from the data of St. Gothard Tunnel. According to this formula, the temperature in the tunnel t is

$$t = \sqrt{41.6393 - 0.1517\,h + 0.0001195\,h^2} + 6.45 + 0.0106\,h \pm 2.5;$$

and supposing the depth $h = 1{,}431$, we have $t = 27.44°$ to 32.44°, and with the mean temperature + 3°, we have the temperature at a depth of 1,431 = $T = 30.44°$ to 35.44° C., it is the same as before.

According to these results, the most suitable height of the entrance in the main tunnel was adopted as being from 4,700 to 5,000 ft.

Great difficulties in construction of approaches have been presented by the weakness of rocks forming the slopes of mountains, the snow avalanches and the great rains.

The slopes of mountains chiefly consist of argillaceous slate, very weak and undurable. It was decided to restrain the superficial sliding by means of retaining walls, or to go over them by means of bridges.

The snow avalanches are here not so great as in the neighboring valleys of Terek, Ardon, and White Aragva, which cross the higher point of the range and are near the glaciers, covering the summits of it. Many avalanches can be directed under the bridges; other avalanches can be avoided by laying the line in tunnels or carrying them on the other side of the valley.

The mountain rains are here also not so strong as in the valleys of Terek, Ardon and Lakhva, the latter being also fed by the waters of glaciers, snow and ice. In consequence of the above, a special reconnoissance along the Arkhot line was made in the summer of 1891.

The reconnoissance of the Arkhot line was based on the maps of general staff survey (ordnance survey); the heights of the principal valleys were measured by means of barometers of Fortin and of Parrot, and the heights of secondary valleys by means of aneroids of Naudet and Goldschmidt. The geological explorations have also been made. This reconnoissance has shown that on both the slopes of the range (northern and southern) the valleys are so wide and their slope is so small that the location of a *low* line presents no difficulties. But for the comparison, on the divide section one high line and two low lines were located—the high line, with a tunnel 3 miles long at a height of 6,300 ft.; the low line, with a tunnel 7.3 miles long, the height of the north entrance being 4,935 ft., and that of the south 5,180 ft., and another low line with a tunnel 10 miles long, the heights of entrances being 4,935 north and 4,536 south. The comparison of these three locations has shown that the high location required a line 15½ miles longer than the first low location, and 18 miles longer than the second; the maximum grade being 2.4 per cent.

In the two low locations the great slope of the upper parts of valleys required a lengthening of line on the northern side 6,125 ft. and on the southern 16,431 ft. and 5,600 ft., which can be made only by means of spiral tunnels.

Besides the crossing of the main range a secondary range—the divide between Terek and Assa—had to be crossed. From the three proposed and explored lines, that going over Tarska was adopted as the best, although it requires the construction of a tunnel about 4 miles long.

According to this reconnoissance, the length of the line with 7½ miles of tunnel was fixed at 159 v. = 106 miles.*

Now these results must be compared with the line designed through the Djomag Pass. But as this line was located high, therefore, for the sake of comparison, its location was changed to a low one. It has required a special reconnoissance of that line.

The comparison of the two locations—one desired through Arkhot Pass, another through Djomag Pass—is shown in the following table:

	Arkhot line, with 7½ mile tunnel.	Djomag line.
General length of line to be constructed	106 miles.	122 miles.
Distance from Tyflis to Dark-kokh.	131 miles.	169 miles.
Greatest height	5,302 ft.	6,065 ft.
Glacier	None.	Very near.
Cost of construction (approximate).	44,860,000 to 50,828,000 roubles.	48,754,000 roubles.

As the advantages of the Arkhot line are obvious, therefore it was decided to lay the location along the same.

THE LOCATION.

For exploration and survey the whole line was divided into three sections—one mountain or divide section and two level or plane sections, the northern and southern.

The technical conditions of designing given by the government have been the following:

For the mountain section, the minimum radius of curvature 700 ft., and the limiting grades (1) in the open parts and straight lines, 2.8 per cent.; on limiting curves, 2.5 per cent.; (2) in small tunnels (less than one-third of a mile), in straights, 2.69 per cent.; on limiting curves, 2.4 per cent.; in tunnels one-third of a mile long; in straights, 2.35 per cent.; on limiting curves, 2.1 per cent; (3) in the main tunnel on straight line, 1.55 per cent.

For the level sections, the minimum radius of curvature 875 ft., and the limiting grades (1) on straight lines, 1.5 per cent., and on limiting curves, 1.25 per cent.; (2) in small tunnels one-third of a mile long, in straight lines, 1.16 per cent., and on limiting curves, 0.97 per cent.

The final location was laid in the following manner: Firstly, an exact topographic survey of the country along the general direction of the line was made. It consisted in running a main line (given by previous reconnoissance), which was carefully measured and leveled, and taking from the stations of that main line as many points in the neighboring valley and mountains as necessary. The position, distance, and height of these points were measured by means of the tachometer of Moineau, made by Kern, in Switzerland. By this means a map with contour lines was made in a scale of $\frac{1}{1000}$. Besides these the survey of both tunnels was made by means of triangulation.

The topographic map of the country being ready, the line of the railroad was laid down, then again leveled, amended when necessary, and then finally located.

The final location has shown that the proposed low line with 10 miles of tunnel was not feasible, because of a fault in the military maps† serving for the preliminary location.

All the data necessary for determination of bridge openings were also collected. In European Russia, as in almost the whole of Europe, the quantity of water flowing from a small watershed is reckoned by the known formula of Köstlin (in meters):

$$W = 0.000016\ Q\ L \text{ cubic meters},$$

where Q is the area of watershed in square meters, and L a coefficient, depending on the length of the watershed—viz.:

For length under	3½	kilometers	$L =$	$\frac{1}{4}$
" "	3½ — 7	" "	$=$	$\frac{3}{8} - \frac{1}{4}$
" "	7 — 10½	" "	$=$	$\frac{3}{16}$
" "	10½ — 14	" "	$=$	$\frac{1}{8}$
" "	14 — 17½	" "	$=$	$\frac{1}{16}$.

For the slopes less than 0.005, the coefficient L can be made ¼.

This formula is based on the supposition that the greatest European rain gives 57 mm. of water in an hour. But in the

* The last condition has no importance in the construction of many American railroads, where the temporary trestling takes the place of permanent bridges, and temporary slopes, with safety switches, are allowed, and snowsheds are in use. Such a system of construction can be sometimes cheaper, when applying the high location.

* In the final location the length became greater (112 miles), because of a fault in one height taken from the military map, the position of south entrance being shown about 370 ft. lower than it is in reality.

† The south entrance point was shown about 370 ft. lower than it really is.

Caucasus Mountains (southern slope, 4,000 ft. high) rain has been observed which gave 26.6 mm. in 15 minutes, say 86.4 mm. in an hour. Therefore the results of Köstlin's formula have been increased by 50 per cent.

(TO BE CONTINUED.)

EVOLUTION OF THE ATLANTIC GREYHOUND.*

By Charles H. Cramp, Esq., Vice-President.

(Copyrighted by the Society of Naval Architects & Marine Engineers.)

Four hundred years is not a very long time when measured as part of the total sea-faring history, but it is enough to have witnessed a progress in the means of transatlantic travel from the caravels of Columbus to such giant steamships as the *Lucania*, *Paris*, *Teutonic*, and their coadjutors or competitors. To trace the history of transatlantic travel, from Columbus crawling across an unknown sea in a clumsy craft that would not now be "rated" in any shipping list, to the captains who drive the great steam liners with almost the regularity of limited express trains, would be or could be made, perhaps, the most entertaining theme possible to a modern pen; but manifestly its natural and necessary scope would far transcend the limits of a paper like this.

Recent events have directed public attention in the United States toward the subject above suggested with a degree of national interest hitherto unfelt during the last 20 years.

From the beginning of the seventies—say, 1871–72 to the present time—the American people have, seemingly, been content to employ Englishmen, Frenchmen, and Germans as the common carriers of the ocean traffic. It is not the purpose of this paper to discuss the causes of this state of things. In fact, no profitable information could be evolved by such discussion, and perhaps the only effect would be to revive conflicts of policy and opinion which, having raged in our public prints and in the halls of Congress for more than a decade, have now, to all appearances, ceased, pending a trial in good faith of measures adopted by the Fifty-first Congress and, by acquiescence at least, sanctioned by the Fifty-second.

At all events, such is the view of the case taken by the commercial public, so that now, for the first time in 20 years, domestic capital and enterprise are beginning to look to the ocean for a field of operations, and to steamships as an object for investment.

In view of these facts, and for other reasons which need not be stated, I shall limit the scope of this paper to the last 20 years, as marking the era intervening between the practical abandonment of ocean traffic by our people and the beginning of their efforts to resume it.

While sea routes are almost numberless, and many of them of vast importance in the sum total of the world's commerce, that of the North Atlantic, embracing the grand thoroughfare of trade and travel between the great powers of Europe and the northern half of the Western Hemisphere, well-nigh overshadows all the rest combined in value and volume of its transactions, and totally eclipses them in the character of its vehicles. To such an extent is this true that, of all the myriad of steamships afloat, not more than 20 or 30 are popularly known even by name, and these are the great vessels which, under the popular designation of "Atlantic Greyhounds," ply in passenger and express traffic between the United States and the principal nations of Western Europe. Plying on the thoroughfare of chief intercourse between civilized nations, they come and go, constantly fraught with the utmost valuable lives in both hemispheres, and for that reason, if for no other, their every performance is eagerly watched by the universal public until their names and the lines to which they belong have become household words.

During the period under discussion—say, from 1871 to the present time—the prime effort of these transatlantic competitors has been to reduce time required in passage, and while of course other qualities—seaworthiness, comfort, and luxury of appointments—have held an even pace in the general contest for supremacy, the effort to augment speed has been so marked and so persistent as to create the aspect of a perpetual race, in which the development of the steamship has become an object enlisting the art and skill of the most masterful minds, and where each successive "lowering of the record" marks a triumph for designer and builder, a fame world-wide and substantial in benefit to mankind.

Under these circumstances it is not too much to say that the grand contest for supremacy on the international race-course of the North Atlantic has ennobled the vocation of those who plan ships and build them, and those who manage them to a grade which abates none of its pride by comparison with any other field in which the human intellect has ever held sway.

While it is true that quick passages and regular runs were always desiderata, even in the days of the old sailing packets, and in the early and primitive stage of the steam epoch, no considerable sacrifices of capital and no especial exertion of skill were then offered to secure those objects; as, indeed, the first thought in these times was to get across without shipwreck, and the question of a few days more or less of passage time was reckoned only as of incidental value.

It is sufficient for the general purposes of historical accuracy to say that the first real "send off" in the great modern steamship race was given by the Inman Company in 1869–70 with the *City of Brussels*, which "broke the record" up to that time by a passage of 7 days, 22 hours, and 3 minutes, being the first to get within the 8-day limit; the best record up to that time being that of the old *City of Paris*—8 days, 4 hours, and 1 minute, in November, 1867. The *City of Brussels* was regarded as a culmination of the shipbuilder's art only 23 years ago, but supervening progress has left her so far in the rear that she is hardly worth description now, except to indicate the starting-point of the advancement, the results of which we see in the colossal flyers of to-day. She was 390 ft. long between perpendiculars, 40 ft. 4 in. beam, and registered 3,090 tons gross; her displacement at 26 ft. draft being 6,900 tons. Her engines were simple, direct-acting, with two 90-in. cylinders of 54-in. stroke, and with steam at 30 lbs. she developed 3,020 indicated H.P. and realized an average speed of 14.53 knots in her best trip. To this challenge of the Inman Line the White Star people quickly responded with the *Oceanic*. This was a vessel of 3,808 tons gross, British Admiralty measurement; 420 ft. long, 40.9 ft. beam, with a depth for tonnage of 23.4 ft. She was powered with a pair of compound or double-expansion engines, having four cylinders; two high pressures of 29 and two low pressures of 78 in. diameter on the "tandem" plan, with a 60-in. piston stroke, and carried usually 66 lbs. of steam. The distinguishing feature of the *Oceanic* was her extraordinary proportion of length to beam, and her ratio of 10½ to 1 in that respect was considered a remarkable venture on the part of her builders, Harland & Wolff, of Belfast. The rapid progress of the times soon distanced her in the North Atlantic race, and she was transferred to the Pacific.

The White Star Company was so well pleased with the result of its first experiment at lowering the record that its managers at once decided to reinforce their line with two new ships, the *Adriatic* and *Celtic*, brought out in 1871–72. These were sister ships in general dimensions, model, and engine power, and were designed to embody certain improvements which the experience of the *Oceanic* had made apparently advisable. The only difference between them was in the arrangement of the decks, which need not be described in detail here.

The *Adriatic* and *Celtic* tonned 3,886 gross, on dimensions of 417 ft. long by 41 ft. beam, and they were propelled by four-cylinder, compound engines, of which the two high-pressure cylinders were each 41 in., and the two low pressures 78 in. diameter, with a 60-in. stroke; and, carrying 80 lbs. of steam, they developed 3,880 indicated H.P. They again reduced the transatlantic passage time below the *Oceanic's* record, the *Adriatic* making her best westward trip in 7 days, 16 hours, and 26 minutes from Daunt's Rock to Sandy Hook, and her eastward run in 7 days, 19 hours, and 43 minutes. The *Celtic* was never quite able to meet the record of her sister ship, her best trip being 7 days, 21 hours, and 55 minutes eastward. The difference, however, was no more than might have been due to ordinary vicissitudes of passage, and afforded only another of many proofs that no matter how faithfully sister ships may be duplicated in build, there will always be slight variations in performance.

These early ships of the White Star Line displayed prominently the genius of Mr. Edward J. Harland, the head of the Belfast firm and also its chief naval architect, and he soon received the honor of knighthood in recognition of his services to the public.

While these enterprises of the White Star Line were in progress, a movement was started on this side of the ocean, which at first bid fair to permanently enlist American capital and national spirit in an effort to regain the position of a maritime commercial power which our country had lost through the Civil War. The immediate upshot of this movement was the formation of the American Steamship Company, and the construction by the Cramp Company of four steamships known as the *Indiana*, *Illinois*, *Pennsylvania*, and *Ohio*. There were at that time indications that the policy of the general Govern-

* Presented at the New York meeting of the Society of Naval Architects and Marine Engineers.

ment toward the national merchant marine would be liberal, and it is probable that these indications had some bearing upon the action of the American Steamship Company; but if so, the policy was altered too soon to realize any benefit, and its subsequent career presented the aspect of an unequal and, of course, unsuccessful contest between an unaided American private enterprise and British competitors backed by all the resources of their powerful Government.

The four ships of the American Line were commissioned in 1872–73. They are 357 ft. long over all, and 343 ft. between perpendiculars, 43 ft. beam, with a tonnage depth of 24 ft., United States measurement, and their gross register is 3,126 tons. They were powered with two-cylinder, compound engines, having piston diameters of 48 and 90 in., with 48-in. stroke; and, carrying 75 lbs. of steam pressure, they developed about 2,000 H.P., which gave them an average speed of 14 knots. They made 8-day trips, and for a time attracted their share of the transatlantic traffic, but, as already intimated, they succumbed at length to the competition of their subsidized British rivals and ultimately passed under the control of the International Navigation Company, by whom they have been considered worth reequipment with new triple-expansion engines after 20 years of continuous service. These ships, though not so large or so high powered as some contemporary vessels, embodied the best shipbuilding practice of their date as to material and workmanship, and are still creditable specimens of American shipbuilding skill 20 years ago, as well as of first-rate efficiency in their classes.

Suffice it to say, that for more than two decades they have had the melancholy distinction of being the only merchant steamships to show the Stars and Stripes regularly in the ports of Western Europe, and in the 300 and odd passages that each of them has made, their performance has invariably been excellent. At any rate, though overshadowed in size and distanced in speed by later products of the fierce competition which has followed their advent, the four "American ships" have served to tide the name of the American merchant marine over a score of dreary and disheartening years, and now, in the dawn of a brighter epoch, they remain sturdy links connecting the promise of the future with the glories of the past. It has been no easy errand to keep the American flag fluttering on a North Atlantic steamship since 1872, but these four ships have done it, and I feel that in the present reawakening of our national maritime spirit, the public will pardon my pride in them as part of the work of our establishment. They are soon to be reinforced in the task of keeping our flag afloat by new and powerful coadjutors whose proportions and performance will restore our ocean prestige to the best relative rank it ever enjoyed; but when that time comes it will still be worth while to remember that it was the *Ohio*, the *Indiana*, the *Illinois*, and the *Pennsylvania* which for 20 years alone represented in our merchant marine the motto of Lawrence in our Navy, "Don't give up the ship!"

Resuming consideration of operations abroad, we observe that the Inman Company did not rest content under the lead which the White Star people had established in 1871–72, but in 1873 they brought out two new ships, the *City of Chester*, built by Caird & Co., of Greenock, and the *City of Richmond*, by Tod & McGregor, of Glasgow. These ships were nearly equal in gross register, the *Chester* being 4,770 tons and the *Richmond* 4,780, but they differed considerably in model and machinery. The *Chester* was 444 ft. long, 44 ft. beam, with a tonnage depth of 34 ft. Her power was a two-cylinder compound engine, with cylinder diameters of 68 and 120 in. and 66-in. stroke, which, with steam at 65 lbs., developed about 4,300 H.P. Although these new Inman ships were considerably larger than their contemporaries and competitors of the White Star Line, and had about 35 per cent. more power, they did not meet the anticipation of their owners so far as the existing record was concerned. At all events, the *Adriatic* held the record through 1873.

Meantime the Inman Company renewed its efforts, resulting in the award of a contract during 1873 to Caird & Co., Greenock, to build the *City of Berlin*. This was a vessel of 5,490 tons gross, 499 ft. long, 44 ft. beam, with a tonnage depth of 34 ft. She was powered with a two-cylinder compound engine, high-pressure cylinders 72 in., low 120 in., stroke 66 in., and, with steam at 75 lbs., the indicated H.P. was 5,200. The *City of Berlin* was distinguished by having the greatest proportion of length to breadth thus far attained—namely, 11 to 1. In other respects the *Berlin* was the finest ship of her time, and she brought the record down to 7 days, 15 hours, and 28 minutes.

Pending this activity of the Inmans, the White Star people were by no means idle, but contemporaneously brought out the *Germanic* and *Britannic*, within a few months of each other, from the Belfast yard of Harland & Wolff. These sister ships are 455 ft. long, 45 ft. beam, and 33 ft. measured depth, their gross tonnage being 5,008. Their motive power was compound, of four-cylinder type, the two high-pressure cylinders having a diameter of 48 in. and the two lows 83 in. each, with 60-in. stroke, and, carrying 75 lbs., their indicated H.P. has reached 5,600.

These ships brought the record down to 7 days, 6 hours, and 52 minutes, and they are still in service in the main fleet of the White Star Line, the *Britannic* having made an average of 7 days, 16 hours, and 9 minutes in 12 trips during the year 1891, or an average all-the-way speed of 16 knots.

From 1874 to 1879 the *Germanic* and *Britannic* easily held the pennant. In the latter year the Cunard people, who had hitherto rested content with their reputation for safety, without joining in the contest for speed, brought out the *Gallia*, built by the Thompsons, of Clydebank. The *Gallia* is a trifle smaller than her White Star rivals. She is 430 ft. long, 44 ft. beam, and 34 ft. tonnage depth, her gross register being 4,809 tons. Her power is a three-cylinder compound engine, the high-pressure cylinder 64 in. and the two lows 80 in. each, with 60-in. stroke, developing 4,440 indicated H.P. This ship, though a distinct advance upon anything yet brought under the Cunard flag, did not affect the White Star championship, as the *Gallia*, in her best passage of 7 days, 16 hours, and 32 minutes, fell 9 hours and 40 minutes behind the best record of the *Britannic*.

In the same season, however (1879), the Guion Line—a new Richmond in this particular field, by the way—brought out the *Arizona*, built at Elder's, and with her took the pennant so long borne by the White Star ships. The principal dimensions of the *Arizona* are 450 × 45.4 × 35.7 ft., and she is powered with three-cylinder compound engines having one 62 in. high and two 90-in. low-pressure cylinders, 66-in. stroke, and, with steam at 90 lbs., developed 6,640 indicated H.P. Her gross tonnage is 5,164, and her best trip was made in 7 days, 3 hours, and 38 minutes, involving an average all-the-way speed of 16 27 knots an hour. The *Arizona* carried the banner, by virtue of this performance, two seasons—1879 and 1880.

This success of the *Arizona* stimulated the Guion people to renewed efforts, and in 1881 they brought out the *Alaska*, also built at Elder's (or the Fairfield yard), then under the able management of the late Sir William Pearce.

The *Alaska's* dimensions are 500 × 50 × 38 ft. molded, with a gross tonnage of 9,500, and her power is a three-cylinder compound engine having a 68-in. high-pressure and two 100-in. low-pressure cylinders, which, carrying boiler steam at 100 lbs., developed in a mean of four days' performances 11,800 indicated H.P., and drove her across the Atlantic westward in 6 days, 18 hours, and 47 minutes, which involved an all-the-way mean speed of 17.44 knots per hour. The *Alaska* now took the pennant, but she did not hold it long. The Barrow Shipbuilding Company brought out the *City of Rome* the same year, and that vessel was put in the service by the Inman Line, as I understand, the title to the ship remaining with her builders.

The contest between the *Alaska* and the *Rome* was fierce. Trip after trip they sped over the ocean "neck and neck," as horsemen say, the average difference between their records being but a few minutes. Finally, however, the *Rome* got down to 6 days and 18 hours, which beat the *Alaska's* best by 37 minutes, and then the *Rome* hoisted the banner in her turn. The *Rome* was the largest ship of her day, excepting, of course, the *Great Eastern;* at all events, the largest single-screw ship up to her date. Her dimensions are 560 × 52 × 37 ft., her gross tonnage 8,144, and her maximum H.P. 11,500 indicated. The *Rome* underwent some vicissitudes in her early history. Her first service in the Inman Line was not satisfactory, and she was thrown back on the hands of her builders. They then made considerable alterations of boiler arrangement and other details of internal economy, and she was put in service again by the Anchor Line, where she has remained to this time.

During the year 1881 the Cunard Company brought out the *Servia*, built, as the *Gallia* was, by Thompsons. The *Servia's* dimensions are 515 × 53 × 37 ft., and her gross register is 7,392 tons. Though a fine ship, the *Servia* repeated the disappointment of the *Gallia*, by failing to reduce the record of either the *Alaska* or the *Rome*. Her propulsion was by a three-cylinder compound engine having one 72-in. high and two 100-in. low-pressures, with 72-in. stroke, and, carrying 90 lbs. of steam, she developed 10,200 indicated H.P. in her best trip, which was 6 days, 23 hours, 49 minutes.

The year 1882 may be considered as the end of the supremacy of 7-day ships, because, though the *Alaska* and the *Rome* subsequently got inside that limit, it was only to a small degree, and the performance was not maintained, so that they remained properly in the 7-day class.

The spring of 1883 witnessed another distinct stride of progress. Thompsons built the *America* for the National Line and the *Aurania* for the Cunards, while Sir William Pearce, of Elders, built the *Oregon* for the Guion Line.

The *America* was in several respects a departure from the then current fashion in transatlantic liners. She was shorter, proportionately beamier, and much smaller in tonnage than her chief rival, the *Oregon*. The dimensions of the *America* were 441 × 51 × 36 ft., gross tonnage 5,528, and her displacement at 25 ft. draft was 9,550 tons. Her engines were compound, three cylinders, high-pressure, 63 in.; two lows, 91 in.; with 66 in. stroke. Carrying 95 lbs. of steam, the *America* developed 9,500 H.P., and crossed the Atlantic in 6 days, 14 hours, and 16 minutes, at a sustained speed of 18.41 knots an hour. Though perhaps the smartest ship of her time, the *America* proved unprofitable, because her carrying capacity was too small in proportion to her operating cost. Fortunately for her owners, the "Russian scare" in 1885 caused her to be taken by the British Government as an auxiliary cruiser, and when she was discharged from that service she was purchased by Italy for use as an armed transport and torpedo depot ship, in which service she has since figured under the name of the *Ecritree*.

The *Oregon* was 501 × 54 × 38 ft., 7,375 tons gross register, and at 25 ft. draft displaced 12,560 tons. Her engines were three-cylinder compound, of the highest working pressure attempted up to that time. Her high-pressure cylinder was 70 in. and her two lows 104 in., with 72-in. stroke, and, carrying steam at 110 lbs., she developed 13,200 H.P., by far the most massive and powerful engines built at that date. The *Oregon's* best performance was an all-the-way speed of 18.58 knots, which gave her a record of 6 days, 9 hours, and 22 minutes. She was also taken up as an auxiliary cruiser during the "Russian scare," and on her release was purchased by the Cunard Company, in whose service she remained until sunk by collision off Long Island.

The *Aurania* is 470 × 57 × 37 ft., 7,269 tons gross, and, at 26 ft. draft, displaces 12,360 tons. Her engines are three-cylinder compound, high-pressure 68 in., two lows 91 in., with 72-in. stroke. Carrying 90 lbs. of steam, she developed a mean of 8,850 H.P., producing an all the-way speed of 17.21 knots. This gave her a record of 6 days, 20 hours, and 48 minutes. Like the *Gallia* and the *Servia*, she was a disappointment to the public in speed.

The Cunard Company continued their development, however, and in 1884-85 brought out the *Umbria* and *Etruria*, built at Fairfield. These sister ships are 501 × 57 × 38 ft., 8,120 tons gross register, and, at 26 ft. draft, displace 13,380 tons of water. They were powered with three-cylinder compound engines of the usual Fairfield type of that day, and differed but little from those of the *Oregon*. The high-pressure cylinder was 71 in., the two lows 105 in., with 72-in. stroke, and, with 110 lbs. of steam, their maximum development of H.P. has been 14,840 in the *Etruria*, and 14,460 in the *Umbria*. They reduced the record to about 6 days even, though each has made at least one passage slightly inside of six days. They brought the Cunard Line to the front again for the first time in several years. From 1884 to 1889 the *Umbria* and *Etruria* maintained their supremacy. It was evident that in them the possibilities of single screw propulsion had been exhausted, and owners and builders who meditated an advance beyond them had to contemplate twin screws.

During the years 1885, 1886, and 1887 there was much activity on the part of the French and Germans. The latter brought out the *Aller*, of the North German Lloyds, in 1885, the *Saale* and *Trave* in 1886, and the *Lahn* in 1887. These were British ships built at Fairfield. They were all single-screw vessels, but they had the distinction of introducing the triple-expansion engine in transatlantic propulsion. The *Aller*, *Trave*, and *Saale* are substantially alike in hull and fittings, and their engines are exact duplicates, except in certain minor or non-essential parts. These vessels are 439 × 18 × 34 ft., and register 4,994 tons in the *Aller* to 5,380 in the *Trave* and *Saale*, their displacement at 26 ft. draft being 10,400 tons. Their triple-expansion engines have high-pressure cylinder 44 in., intermediate 70, and low 108 in., with 72-in. stroke. Carrying steam at 150 lbs., these engines have developed 8,300 indicated H.P., and their best sustained speeds have been 17.7 knots for the *Aller*, 17.1 for the *Saale*, and 18.6 for the *Trave*. As the time of these ships is reckoned from Southampton, certain deductions are necessary for fair comparison with ships dating from Queenstown, so it is not worth while to give their records, except to say that to equalize the records of ships starting from the two points, allowances must be made in favor of the Southampton ship as follows:

For 17 knots speed, 16 hours and 20 minutes.
For 17½ knots speed, 16 hours.
For 18 knots speed, 15 hours and 30 minutes.
For 18½ knots speed, 14 hours and 56 minutes.
For 19½ knots speed, 14 hours.

The *Lahn* is 10 ft. longer, 1 ft. wider, and 10 in. deeper than her three consorts, and her gross tonnage is 5,681. Her engines are also of a different type, being five-cylinder triple-expansion with two high-pressure cylinders 32½ in., one intermediate 68 in., and two lows each 85 in., the duplicate cylinders being arranged tandem, one high and one low working together. These engines, with 150 lbs. of steam, developed 9,800 H.P., and produced a speed of 18.40 knots, making a Southampton record of 6 days, 23 hours, and 42 minutes, which, at her rate of speed, is equal to a Queenstown passage of 6 days, 7 hours, and 30 minutes.

The *Spree* and *Havel*, built at Stettin, in 1890, for the North German Lloyds present no features essentially different from the *Lahn*, except some increase in size, and as they have not lowered her record it is not worth while to go into details of them.

In 1889–90 the successes of their neighbors stimulated the Hamburg Company to efforts which took shape in the *Columbia*, *Normannia*, and *Prince Bismarck*. The *Columbia* was built by Lairds, and *Normannia* at Fairfield; the *Bismarck* being the only one of the three built at home. The *Columbia's* dimensions are 463.5 × 55.6 × 35.5, and her gross register is 7,363 tons. Her twin screws are driven by two three-cylinder, triple-expansion engines, with cylinder diameters of 41, 66, and 100 in. and 66-in. stroke. With steam at 150 lbs. these engines have developed 14,600 collective indicated H.P., producing mean speed for a passage of 19.15 knots, and a Southampton record of 6 days, 14 hours, and 2 minutes, equivalent to a Queenstown record of about 6 days. The *Normannia* is larger than the *Columbia* and has more powerful machinery.

The *Normannia's* dimensions are 500 × 57.5 × 34, and she tons 8,250. Her triple-expansion engines have cylinders 40, 67, and 106 in., with 66-in. stroke, and, carrying steam at 150 lbs., they have developed over 15,000 indicated H.P. Her best mean speed for a passage has been 19.33 knots. The *Fürst Bismarck* is chiefly remarkable as being the most important commercial ship ever built in Germany, and as a result of the policy adopted by the German Emperor to encourage home shipbuilding by making marked discriminations in favor of such ships as compared with those built abroad. Her dimensions are 502.6 × 57.6 × 38, and her tonnage 8,874. Her engines are triple, with cylinder-diameters of 43 5/16, 66 5/16, and 106 5/16 in., having a stroke of 63 in. She is reported to have developed 16,800 indicated H.P., as a mean of 6 days on the trip which gave her, for a brief period, the Southampton record.

During all this effort on the part of the English and Germans, the French remained quiescent until 1886–87, when they brought forward the *Champagne* and *Bretagne*, built at St. Nazaire, and the *Bourgogne* and *Gascogne*, built by the *Forges et Chantiers de la Mediterranee*. These ships differ but little in dimensions or performance, and detail of them is hardly necessary, except to say that they ton from 7,087 to 7,395 gross, have compound engines of about 9,800 indicated H.P. on a single screw, and the smartest of them, the *Bourgogne*, has made a Havre and Sandy Hook record of 7 days and 9 hours, which, at her rate of speed, 17.91 knots, is equal to a Queenstown record of 6 days and 13 hours. These ships satisfied the French until 1891, when they brought out the *Touraine*, built at St. Nazaire. She is the first French liner equipped with twin screws. Her dimensions are 520 × 56 × 34 ft., and she tons 8,863 gross. Her engines are three-cylinder, triple-expansion. Cylinder dimensions 41, 60½, and 100 in., with 65-in. stroke, and, carrying 140 lbs. of steam, they have developed a mean average of 13,600 indicated H.P. (French), which drove her from Havre to Sandy Hook in 7 days, 3 hours, and 5 minutes, equivalent to a Queenstown record of 6 days, 4 hours, and 35 minutes.

While the *Touraine* has not made any whole-trip record to compare with the *Paris* or *Teutonic*, she has shown some remarkable spurts.

Externally, the *Touraine* is one of the handsomest ships afloat, and her interior fittings sustain the repute of French builders for grace and elegance.

I have given considerable time to this detail of dimension and performance, because I have often desired to have such a compilation in good shape for ready reference; but not being able to find one concluded to make it myself. It is not possible to survey the evolution of the Atlantic greyhound without such reference, because in the absence of data as to dimensions and power, discussion of relative performance would be without result.

We have now to consider the latest types, the *New York* and

Paris, the *Majestic* and *Teutonic*, and the *Campania* and *Lucania*.

These ships are so well known and have been so recently and minutely described that it is not necessary to reproduce their details, and I will pass at once to another, and, perhaps, more interesting phase of my subject, but before passing on, it should be mentioned that to the International Navigation Company in procuring the building of the *New York* and *Paris* belongs the credit of inaugurating the evolution from single to twin screws in passenger ships, and of first offering to the public steamships so subdivided as to be unsinkable with three compartments flooded and with no water-tight doors near or under the water-line.

However, in all the progress that I have noted there has been no improvement of model, or at least none worth noting.

The principal fad of the great English builders is an aversion to statical stability; a repugnance to metacentric height. As one of their standard authorities remarked in a recent paper, "A ship will roll; you cannot help that. Therefore the problem is to make her period as long and her motion as easy as possible."

Even if this be true in theory the practices by which they seek to put it in effect are based upon error.

In pursuit of "an easy roll" they persistently design their models without initial stability, and then make them stand up by great quantities of water ballast or other dead weight which pays nothing.

When I undertook the design of the two steamships now building under our shipyard numbers 277 and 278, I avoided this fad at the outset.

As a part of the discussion which followed I addressed, at his request, the President of the International Navigation Company in writing as follows:

"Any system of design or construction which contemplates the carriage of water ballast (or other dead weight not cargo or coal) as an inseparable condition of stability under any circumstances is radically defective, and should be condemned. Of course every double-bottom ship should be so compartmented that the spaces may be used as trimming tanks for regulating fore-and-aft trim when desired, but I utterly reject and condemn any system under which they must be viewed as necessary adjuncts to stability.

"Under such a system no advantage can be taken of decreased draft caused by consumption of coal or absence of cargo, but the ship must always be kept down to a load draft in order to stand up. This is a purely English fad, and the English designers stick to it with characteristic tenacity. In this, as in many other fads, the English appear tenacious in the exact ratio of the density of their error.

"The proposition that you must carry 1,000 or 2,000 tons of dead weight in water ballast when you happen to be short of cargo or run down in coal, is one that I cannot really discuss with patience when it is possible to build the ship on lines that will make her stand alone without detriment to any other desirable quality, and with vast improvement to her most important characteristic, that of safety at all times and in all conditions."

One cannot conveniently amplify technical propositions in a business letter, and hence in my communication I merely touched the heads of my topic, and referred to the most important consideration last and also most briefly—that of safety at all times and in all conditions.

From this point of view I dismiss the commercial aspect of water ballast or permanent dead weight with the remark that any steamship owner who will accept a design that compels him to lug around 1,000 tons or so of non-paying freight in a bottom during the life of his ship, deserves what he gets, and is not entitled to sympathy.

In connection with the conventional English plan of indispensable water ballast, there has been suggested as an ultimate refinement a system of ingress and expulsion of water to and from numerous compartments by means of valve and pump-gear under electric control from a central station. Let us suppose such a system so perfectly developed that an operator can sit at an electric keyboard with a button for each valve and for each pump, and there operate them as Paderewski plays the piano. This may be very pretty and very scientific, but, after all, it involves the human factor, with its liability to err, in a manner that places the lives of a thousand passengers at the fingers' ends of the operator. I have, during 40 years of observation and experience in my profession, seen so much of the human factor under such circumstances that the elimination of it in every possible direction has almost become a passion with me. In any ship design it is a first principle with me to provide as many absolute and unchangeable qualities of performance and safety as possible, and to place them beyond manipulation.

The first and most important of such qualities is that of initial stability. With it the ship will stand up and float despite errors or misfortunes of management or condition. Without it she and all on board may at any time be at the mercy of a tipsy tank trimmer, or of a jammed valve.

With regard to the increase of size as an element in the development of speed, I think we may all agree with Dr. Francis Elgar in his paper read before the British Institution of Naval Architects July 11 last, that the limit of commercial practicability has been reached. The operation of Froude's well-known law of comparison, whereby the ratio of indicated H.P. required to drive a ton of displacement at a given speed decreases in a certain progressive ratio as the increase of dimensions, naturally led up to the *Campania*.

But hydrographic conditions are inexorable, and they impose an unalterable limitation of one dimension—namely, draft of water, which, in turn, imposes an architectural limitation upon all the other dimensions. Dr. Elgar hopes that this limitation will be enlarged by dredging away bars and deepening docks, so that 30 ft. of water may be had where only 26 ft. now exist, so that it might become practicable to design a ship on the dimensions permissible with 30 ft. draft. That would, perhaps, mean a ship about 700 ft. long and 75 to 80 ft. beam. But it is not worth while at this time to consider such a contingency. The practical commercial limit of our metropolitan seaport is about 28 ft., and it would require an expenditure of more millions than one cares to contemplate to augment it to admit the safe passage of a steamer drawing 30 ft. either in channel or at dock, so we might as well accept 28 ft. as the basis of design in our time.

There is another limitation to practicable size which has not been mentioned—the ship may become too large for the captain. It is the fact that while we may increase dimensions of ships, the size of man is a fixed quantity. I mean this in the physical as well as the mental sense. A ship is not like an army, which can be divided in sections, each capable of independent motion. She must be commanded and manœuvred in one piece and by one man.

The ratio of beam to draft in the immersed body ought never to exceed 3 to 1, and is doubtless best at about 2½ or 2⅔ to 1. All the elements of model, lines, girder strength, stability, easy motion, and structural symmetry are involved in this ratio of dimensions, because the length is limited by the other two. We cannot go above a certain molded depth without getting the top sides too high, and we cannot otherwise get the necessary girder strength beyond a certain length.

Therefore, on a basis of 28 ft. draft we may have a beam of about 70, molded depth approximating 50, and a length of 600 to 620 ft. That seems to be about the end. In contemplating such ships the problems of structure and propulsion assume added importance proportionate to the dimensions.

Of course, the equivalent girder circulation can be made in a 620-ft. ship as well as in a shorter one, but it is probable that in such great lengths and with such stresses of power as are applied to that class of vessels larger margins of safety should be allowed than is the practice in computing smaller girders. At any rate, I should do so in designing any such ships.

A 600 or 620-ft. ship that will work her framing or buckle her plates in a sea-way is not a good piece of property. Butt-starting, seam-opening, and rivet-shearing are only questions of time in such a ship, and the danger increases with the size in a high ratio.

We may now consider briefly the question of propulsion, which I will introduce by a further quotation from the letter to the President of the International Navigation Company, already referred to. Arguing that the limitations of practicable power in one engine were quite as definite as those of size in ships and for cognate reasons, I wrote as follows:

"The most important practical reason for the distribution of power through two or more screws, instead of concentrating it in one, is the limitation placed upon the effective or economical diameter of the screw itself by the inexorable conditions of draft.

"Reduction in size and weight of forgings, decrease of danger of total disablement, etc., are the plainest and simplest elements of the question, and are so well known and generally accepted as to hardly require attention.

"You must have a certain immersion of the screw, the more the better; it should be at least 9 ft.—that is, the top of the disk should be about 9 ft. below the surface. Now as the hydrographic conditions of our Atlantic Coast harbors practically restrict draft to 27 or 28 ft., it follows that the maximum diameter of a screw is limited.

"Again, unless you give your engine much higher revolutions than is desirable or economical in machines under existing conditions, which must be driven at full speed five or six

days at a stretch, you cannot put more than 12,000 indicated H.P. through one screw.

"These facts, with the force of a syllogism, demonstrate that whenever you require more than 12,000 indicated H.P. you must have two screws, and if you find it necessary to exceed 24,000 indicated H.P. three will be required.

"There is absolutely no escape from this proposition; no alternative in practice; and volumes enough to make a library, by all the professors in the world, cannot alter the plain, mechanical fact.

"An English authority has recently called attention to an alleged greater tendency of twin screws to 'race when rolling,' and that if instead of the two screws there were three, the extension of the side screws laterally would tend to reduce the advantage of smaller diameters, etc. This statement is disposed of by the remark that what causes racing is the pitching of the ship, which affects all the screws alike, when in the same horizontal plane, but with the counter screws sufficiently immersed no properly built ship would roll enough to seriously affect their efficiency.

"It will not do to treat this question as if it referred to all classes of ships alike. The question is not as to the relative advantage of single, twin, or triple screws, *per se*, in any and all kinds of ships, but as to the limit of dimensions in one engine and screw for safe and economical working. When we want to power a ship beyond that limit we must duplicate or triplicate the engines and screws in due ratio.

"No one, so far as I know, maintains that, except in men-of-war and for tactical reasons mainly, and for additional safety, two screws ought to be used when one will do the work, or three where two can do it. Some lake and river boats have two screws, but in such cases the object is to facilitate landing at wharves or because the draft is insufficient to afford diameter enough for one screw to take the power. But in sea-going vessels such construction would not apply."

These remarks are based on existing conditions of practice. The future may develop modifying results. But men do not build ships on a prediction. Hence I limit my views by what we now know.

I hope that the members of the Society will not expect me to say very much about the efforts which are now being put forth to restore the American flag to its proper rank in the contest of the North Atlantic. We are, as is well known, building a couple of 536-ft. ships for the International Navigation Company. They are both framed up about two-thirds of their length amidships, and plating is in progress. They will be launched next spring and will go in commission about a year from now.

Their principal dimensions and qualities are as follows:

Length on load water-line	536 ft.
Length over all	554 "
Extreme breadth	63 "
Molded depth	42 "
Gross register	about 11,000 tons.
First cabin capacity	320 passengers.
Second cabin capacity	200 "
Third cabin capacity	900 "

Their propulsion will be by twin screws, actuated by two quadruple-expansion engines, on four cranks, which, with steam at 200 lbs., will probably develop about 20,000 collective indicated H.P. To support the outboard shaft bearings the hull is built out in a horizontal web to a steel frame having both bosses cast in one piece and weighing about 68,000 lbs. The after deadwood is cut away and the keel slopes up so that the shoe meets the boss frame at the after end. It will be observed that these ships are considerably larger than the *New York* and *Paris*, or about half-way between them and the *Campania* class. I will not venture a prediction as to their probable performance, but I will guarantee them to be perfectly safe, comfortable, and economical ships.

They are to be followed closely by other ships, which I will not now describe, except to say that they will not shrink from any comparison or competition.

The conditions of the mail contract between the Government and the International Navigation Company, place at the disposal of the Navy seven great ships, almost instantly convertible into commerce destroyers, averaging greater performance than the *Columbia* and *Minneapolis*. This practically reinforces the Navy by $21,000,000 worth of ships, and that not only without cost of building, but also without the expense of maintenance and commission in time of peace.

From this point of view, the policy of the International Navigation Company, of which these ships are the result, appeals to the best and loftiest public sense. It is more than a mere commercial enterprise. It is as bold a stroke of national ambition and patriotic aspiration as was ever made. It aims at achievements the beneficial results of which will be felt in every household throughout our broad land.

And now, in conclusion, let me remark that these ships are American from truck to keelson. No foreign materials enter into their construction. They are of American model and design, of American material, and they are being built by American skill and muscle. The existing tariff law, Section VIII, gives the privilege of importing all "plates, tees, beams, angles, wire rope and composition metals" that might be needed in their construction. But I did not take advantage of it. On the contrary, we placed every order with American rolling mills, forges, and foundries.

In view of such a situation, why should any one persist in threatening with hostile and destructive legislation those who are making such efforts in the face of such obstacles? No American shipowner or shipbuilder asks for free ships. The demand for such a law comes from England, not from our own people. All that Americans ask is to be let alone.

Since we began this work our English friends have had a good deal to say about it. They seem to think that it was impertinence on our part to have entered the contest for supremacy on the North Atlantic. They deprecate the fact exceedingly. But they may as well understand that, after many years of practical expulsion from the ocean, the Yankees are coming again, and coming to stay. The work we have in hand is only the beginning. It is a pretty fair start, but if they should ask you what the future has in store you may tell them, in the words of our Paul Jones on a certain occasion, well remembered by Englishmen, that "we are just beginning to fight."

ACCIDENTS TO LOCOMOTIVE ENGINEERS AND FIREMEN.

THE object of publishing this monthly list of accidents to locomotive engineers and firemen is to make known the terrible sacrifice of life and limb that is constantly going on among this class of people, with the hope that such publication will in time indicate some of the causes of accidents of this kind, and help to lessen the awful amount of suffering due directly and indirectly to them. If any one will aid us with information which will help to make our list more complete or correct, or who will indicate the causes or the cures for any kind of accidents which occur, they will not only be doing us a favor, but will be aiding in accomplishing the object of publishing this report, which is to lessen the risk and danger to which the men to whom we all intrust our lives are exposed.

The only, or the chief source of information we have, from which our report is made up, is the newspapers. From these the following list of accidents, which occurred in October, has been made up. Of course we cannot report those of which we have no knowledge, and doubtless there are many such.

ACCIDENTS IN OCTOBER.

Phillipsburg, N. J., October 2.—A steam-pipe burst on an engine of the Jersey Central Railroad while running at full speed to-day. In order to stop the train it was necessary to stand where the steam was blowing out. The engineer, Joseph Lutz, did this, and was terribly scalded; he fainted as he staggered from the cab.

Parkersburg, W. Va., October 2.—Patrick Connelly, an engineer on the Baltimore & Ohio Railroad, was run down by a passenger train to-day, and died from his injuries.

Springfield, Wis., October 2.—Passenger train No. 4, on the Chicago, Milwaukee & St. Paul Railroad, ran into an open switch at Lyman, dashing through three stock cars and instantly killing the engineer, Maxey Hall, and fireman, Charles Robinson. It is reported that this is a third attempt at train wrecking.

Milford, Mass., October 2.—Fireman Hennessey, on the Grafton & Upton Railway, was severely scalded about the face and head to-day while filling a lubricator, by steam escaping from the boiler. The flesh peeled off in flakes.

Easton, Pa., October 3.—A Lehigh Valley coal engine cut a Crane Iron Company's engine in two at Catasaqua this morning. A dozen coal cars were wrecked and all travel blocked. The collision was due to a signal giving a clear track to both engineers by a watchman who had been in the position for more than 20 years. After he saw what he had done he went home and shot himself. John Ray, fireman on the Crane Company's engine, died of injuries received, and Engineer Herbert James will be a cripple for life.

LOCOMOTIVE RETURNS FOR THE MONTH OF AUGUST, 1893.

Name of Road.	Number of serviceable Locomotives on Road.	Number of Locomotives Actually in Service.	Locomotive Mileage. Passenger Trains.	Freight Trains.	Service and Switching.	Total.	Average per Engine.	Av. Train. Passenger Cars.	Freight Cars.	Coal Burned per Mile. Passenger Train Mile.	Freight Train Mile.	Service and Switching Mile.	Train Mile, all Service.	Passenger Car Mile.	Freight Car Mile.	Cost per Locomotive Mile. Repairs.	Fuel.	Oil, Tallow and Waste.	Other Accounts.	Engineers and Firemen.	Wiping, etc.	Total.	Cost per Car Mile. Passenger.	Freight.	Cost of Coal per Ton.
										Lbs.	Lbs.	Lbs.	Lbs.	Lbs.	Lbs.	Cts.	Cts.	Cts.	Cts	Cts.	Cts.	Cts.	Cts.	Cts.	$
Atchison, Topeka & Santa Fé	....	....	.....	....	. . ....	.....	....	....	....	....	....	....	....	....	...	....	....	....	....	....	....	....	....	....	....
Canadian Pacific	615	....	562,022	715,582	567,676	1,845,280	3,000	....	....	....	....	....	63.91	....	....	3.46	10.16	0.34	....	5.65	1.26	20.87	....	....	3.15
Chic., Burlington & Quincy	541	....	.....	.....	.....	1,563,418	2,889	5.77	19.39	....	....	....	77.27	....	..	5.29	5.11	0.23	0.15	6.78	0.05	17.61	....	....	1.32
Chic., Milwaukee & St. Paul	828	...	.....	.....	.....	2,272,886	2,649	....	....	....	....	....	63.27	....	....	3.44	6.60	0.28	...	6.92	...	17.24	....	....	2.40
Chic., Rock Island & Pacific	565	....	609,634	919,110	344,214	1,872,958	2,643	....	...	55.04	76.45	38.00	62.38	....	....	2.84	5.65	0.25	4.28	5.99	0.38	14.69	.. .	....	1.96
Chicago & Northwestern	888	....	787,814	1,152,341	629,000	2,569,155	2,893	....	...	....	...	....	79.57	.. .	....	3.06	7.60	0.35	....	6.37	0.82	18.20	...	....	1.90
Cincinnati Southern	....	....	.....	.....	.....	.....	....	....	....	...	....	....	....	....	...	....	...	....	...	...	....	....	....	....	....
Cumberland & Penn.*	....	23	5,639	34,852	.....	40,491	1,760	....	....	....	....	....	..	....	...	7.03	4.43	0.04	....	...	1.86	13.72	....	....	....
Delaware, Lackawanna & W. Main L.	211	172	.....	.....	.....	590,026	3,430	....	....	.. .	....	....	84.35	....	....	3.21	6.53	0.46	....	5.77	....	15.97	....	....	...
Morris & Essex Division	160	....	188,901	152,792	76,333	418,026	2,612	....	....	....	....	....	55.97	....	....	3.67	6.84	0.44	....	6.38	....	19.30	....	....	3.12
Hannibal & St. Joseph	...	74	.. ..	.. ...	.....	248,931	3,556	5.93	16.54	....	....	....	75.38	13.83	5.29	2.99	4.87	0.10	0.25	6.75	0.03	14.99	....	....	1.36
Kansas City, F. S. & Memphis	....	...	101,051	167,939	86,000	354,990	....	....	....	....	....	....	60.65	....	....	3.71	5.49	0.36	0.45	7.46	...	17.47	....	....	1 75
Kan. City, Mem. & Birm	42	38	36,676	44,664	13,459	94,799	2,495	....	....	..	....	...	66.53	....	....	4.17	3.48	0.22	0.35	7.12	....	15.34	....	....	1.00
Kan. City, St. Jo. & Council Bluffs	37	37	.....	.....	... ..	126,529	3,420	5.02	18.67	....	....	. ..	61.46	12.57	4.85	3.63	5.54	0.15	0.06	6.12	0.02	15.52	....	....	1.90
Lake Shore & Mich. Southern	599	...	484,450	625,722	409,476	1,519,648	2,537	....	....	59.66	84.96	34.70	62.87	....	....	2.83	4.88	0.18	....	6.87	0.20	14.96	....	...	1.54
Louisville & Nashville	....	....	.....	.... ..	.....	.....	...	.. .	....	....	....	....	....	....	....	..	....	....	....	....	....	....	....	....	....
Manhattan Elevated	....	273	708,103	.....	64,583	772,686	2,830	....	....	...	....	....	38.46	....	....	1.60	7.80	0.20	....	9.40	....	19.00	....	....	4.08
Mexican Central	148	119	.....	.....	.....	376,740	....	...	...	....	....	....	68.49	....	....	5.89	13.30	0.55	0.21	4.78	0.83	25.56	....	....	4.29
Mil., L. S. & Western	112	....	94,807	118,247	64,855	277,909	2,481	....	..	....	...	....	66.13	....	....	3.72	7.29	0.16	....	6.09	0.91	18.17	....	....	2.20
Minn., St. Paul & Sault Ste. Marie	....	....	77,489	158,550	87,524	323,563	....	4.76	20.03	....	....	....	63.25	....	....	1.73	11.87	0.24	...	6.06	....	19.90	....	....	3.73
Missouri Pacific	342	....	.....	.....	.....	979,113	3,294	4.41	16.21	....	....	...	77.22	....	....	4.90	5.48	0.33	1.05	6.29	1.39	19.44	3.98	1.43	1.38
Mobile & Ohio	107	70	75,349	99,135	49,588	224,072	3,201	. ..	22.30	....	....	....	54.68	....	....	1.10	3.91	0.19	0.78	5.71	1.04	12.73	....	....	1.43
N. O. and Northeastern	...	....	.....	.....	.....	.....	....	....	....	....	....	....	..	....	....	....	...	....	....	....	....	....	....	....	...
N. Y., Lake Erie & Western	627	417	500,520	794,703	259,489	1,554,712	3,728	5.20	23.40	86.50	126.50	63.45	92.15	16.50	5.40	3.91	7.07	0.38	2.68	7.30	1.18	22.52	....	....	1.38
N. Y., Pennsylvania & Ohio	254	167	176,680	392,166	140,509	709,355	4,247	6.30	18.20	72.60	123.70	84.35	93.55	....	...	2.69	5.71	0.29	4.17	6.73	0.96	20.55	....	. ..	1.12
Norfolk & Western, Gen. East. Div.†	....	....	125,492	262,041	51,503	439,036	2,710	4.20	18.60	46.08	116.63	....	81.37	9.30	5.60	3.10	3.80	0.40	....	....	....	7.30	....	....	....
General Western Division†	....	....	119,948	269,726	42,746	432,420	2,496	5.60	17.20	66.00	121.00	....	110.00	12.10	7.52	4.30	4.30	0.35	....	....	....	8.95	....	....	....
Ohio and Mississippi	107	...	146,937	133,304	86,330	366,571	3,425	....	....	....	....	....	75.47	....	....	2.42	2.94	0.23	1.30	5.33	1.52	13.74	....	....	0.78
Old Colony	....	...	.....	.....	.....	.....	....	...	.. .	....	....	....	....	...	....	....	....	....	....	...	....	...	....	...	....
Philadelphia & Reading	...	...	497,818	324,964	947,469	1,770,251	....	....	....	....	....	....	73.58	....	. ..	4.59	4.10	0.32	....	5.72	0.40	15.13	....	....	....
Southern Pacific, Pacific System	735	663	649,064	864,527	278,565	1,792,156	2,703	5.41	4.35	....	....	....	67.52	....	....	4.06	16.81	0.22	2.30	7.39	1.12	31.90	....	...	5.01
Union Pacific	992	..	574,554	1,047,503	317,797	1,939,854	3,208	6.14	17.53	...	...	. ..	94.38	....	....	6.75	9.16	0.43	0.94	8.16	1.24	26.68	3.99	1.88	1.98
Wabash	425	362	452,921	640,006	242,859	1,355,786	3,680	5.02	16.70	65.74	93.28	55.14	78.33	...	....	3.27	4.52	0.30	....	6.18	0.83	15.10	2.50	1.09	1.17
Wisconsin Central	150	117	129,238	196,772	63,436	390,446	3,334	....	....	....	....	....	73.19	....	....	2.04	8.95	0.20	....	7.14	....	18.33	....	....	2.41

NOTE.—In giving average mileage, coal burned per mile and cost per mile for freight cars, all calculations are made on the basis of *loaded* cars. Empty cars which are reckoned as one loaded car are not given upon all of the official reports, from which the above table is compiled. The Union and the Southern Pacific rate two empties as one loaded; the Kansas City, St. Joseph & Council Bluffs and Hannibal & St. Joseph Railroads rate three empties as two loaded; and the Missouri Pacific and the Wabash Railroads rate five empties as three loaded, so the average may be taken as practically two empties to one loaded.

* Switching engines allowed 6 miles per hour; wood, construction and gravel trains, 10 miles per hour.

† Wages of engineers and firemen not included in cost.

Poughkeepsie, N. Y., October 4.—A caboose of a freight train jumped the track on the New York Central & Hudson River Railroad near Hyde Park to-night. The engine of an approaching express struck it and was derailed, going into the river. The engineer went down with the engine, but escaped with a few slight injuries. The fireman jumped and was also slightly injured.

St. Mary's, Ky., October 6.—A rear-end collision occurred at Gethsemane, 20 miles north of this city, on the Louisville & Nashville Railroad about 5 o'clock to-day, in which Engineer Higgins and his fireman were instantly killed.

Kansas City, Neb., October 6.—A disastrous collision occurred on the Rock Island Railroad, 9 miles west of Manhattan, shortly before 12 o'clock to-night. The trains were running at a high speed at the time. Engineer Gene Cole was badly scalded and bruised about the face and body. His left arm and two fingers were broken. The engineer of the freight train and fireman Dave Hartington, of the passenger train, were also injured.

Louisville, Ky., October 6.—A rear-end collision occurred on the Knoxville Division of the Louisville & Nashville Railroad at 5 o'clock this morning. The first section of a freight train broke in three pieces, and the cab stopped on the New Hope Bridge. In this Alexander Burke, an engineer in charge of two dead engines, was sleeping. The second section came along striking the caboose on the bridge and carrying it down with it. Engineer Higgins, of the second section, and Engineer Burke, in the caboose, went down with the wreck and are buried beneath the *débris*.

Allentown, Pa., October 6.—A Lehigh Valley express train ran into the rear of a Pennsylvania coal train on the Pennsylvania Road below New Boston to-day. The caboose and three coal cars were knocked over the embankment, and the engineer slightly injured.

Elmira, N. Y., October 6.—A rear-end collision occurred between an engine running wild and a freight train on the Delaware, Lackawanna & Western Railroad this morning between this point and Bath. The engineer and fireman jumped and were bruised about the face and head. The cause of the accident was foggy weather and failure of the flagman to get back the proper distance.

Clay Center, Kan., October 7.—A collision occurred 125 miles west of Kansas City at Keats, on the Rock Island Railroad, to-day, between a freight and passenger train. The engineer and fireman of the passenger train were badly hurt. The cause of the collision was the failure to deliver orders.

Reading, Pa., October 8.—A freight train ran into a derailed car that had been thrown off from the opposite track near Exeter Station this morning. The locomotive was thrown down an embankment and fell on its side. The engineer, William Flannery, was seriously scalded.

Alliance, O., October 9.—Two hundred kegs of powder exploded on an east-bound freight train on the Pittsburgh, Fort Wayne & Chicago Railroad near North Lawrence this evening. Engineer Colgan and his fireman were fatally burned.

Leavenworth, Kan., October 9.—John Cookston, fireman on the Kansas City, Wyandotte & Northwestern Railroad, was severely injured this morning by being caught between a crane of a water tank and the tender. He was standing on the step-board outside of the engine.

Boston, Mass., October 10.—Joseph Elbor, fireman on the Old Colony Railroad, was run over by an engine near Jamaica Plains to-day. He left the cab and attempted to drop to the ground, but was caught between the sleepers which cross Stony Bridge, and was dragged a distance of nearly 50 ft. when the wheels of the tender ran over one leg. The other leg and arm were crushed in an attempt to save himself.

Fairfield, Pa., October 10.—A collision occurred on the Beech Creek Railroad near Phillipsburg this morning. Clarence Bradon, engineer of the freight, was hurt about the legs.

Whiting, Ind., October 10.—A Pennsylvania train ran into an open switch and against two Pullman cars standing on the track. Engineer Henry Warner and Fireman John Christy were killed. The fireman was beneath the engine, and was scalded to death by escaping steam.

White River Junction, Vt., October 10.—A through train on the Passumpsic Division of the Boston & Maine Railroad ran off the track just west of the Connecticut River bridge near this station to-night. The accident was caused by a switch being misplaced by an intoxicated switchman. Engineer Rooney was badly hurt by jumping from his engine.

Saginaw, Mich., October 11.—A south-bound express on the Michigan Central Railway ran into a freight train at Chesaning. The engine, tender, baggage and express cars were thrown from the track and badly wrecked. The engineer was hurt.

Wheeling, W. Va., October 11.—A collision occurred on the Wheeling & Lake Erie Railroad near Valley Junction to-day. Engineer Mears was slightly hurt by jumping.

Norristown, Pa., October 12.—Jacob Raise, engineer on the North Penn Branch of the Philadelphia & Reading Railroad, was struck on the head by a mail crane as he was leaning out of the engine to-night. He was knocked senseless by the blow, but after the train had been stopped at Sellersville by the fireman he recovered consciousness and resumed work.

Troy, N. Y., October 12.—William H. Frame, an engineer on the New York Central & Hudson River Railroad, fell from his engine to the bottom of the turn-table pit at the Green Street round-house this afternoon. He was rendered unconscious by the fall.

Bourbon, Ind., October 13.—There was a rear-end collision on the Pennsylvania Line between two light engines 5 miles west of here to-day. The first was being held for orders when the second ran into it. Engineer Parrish jumped from the engine. He broke his jaw and put out one eye by striking it against a tie.

Jackson, Mich., October 13.—An excursion train running at a high rate of speed dashed into another train at this station this morning. William Whalen, engineer, was badly burned, and one of his legs was broken. He died shortly after from his injuries. The first train was just pulling out of the station and was protected by a semaphore, but it is claimed that the air on the second section failed to work, and the accident was the result.

Appleton, Wis., October 13.—Three box cars loaded with wood ran off a side track near Appleton Junction to-night. A special passenger train ran into them, the engineer being struck on the head by a piece of flying wood and badly injured. Three box cars and several passenger coaches were demolished.

Cumberland, Md., October 13.—A passenger train on the Baltimore & Ohio Railroad ran into a land slide near Sleepy Creek to-night. Charles Pennel, the fireman, was thrown from the cab down an embankment about 40 ft., sustaining injuries about the body and head, and was injured internally. Engineer Dyche was caught in the engine when overturned, but managed to creep out on the foot-board, not, however, until he was scalded by escaping steam.

Buffalo, N. Y., October 14.—A passenger train on the New York, Chicago & St. Louis Railroad collided with eight coal cars, which had been blown off the siding at Athol Springs, a short distance from here this morning. It was storming at the time, and the engineer could not see the cars until he was upon them. Jerry Lane, the fireman, was caught in the engine cab and crushed to death. Henry, the engineer, was badly hurt and may not recover.

Chicago, Ill., October 14.—A collision occurred between an engine of the Chicago & Northern Pacific Railroad and a Baltimore & Ohio passenger train at Archer Avenue to-day. Mark Murphy, fireman of the Chicago & Northern Pacific engine, had his head and hip hurt in jumping from the engine. David Ullery, fireman of the Baltimore & Ohio engine, was also bruised in jumping.

Topeka, Kan., October 15.—A collision occurred near Paxeco, 20 miles west of here, this morning between a freight and passenger train. Charles Topham, engineer of the passenger train, jumped and sustained fractures of the skull, from which he subsequently died.

Pittsburgh, Pa., October 17.—During a fog this morning the Pennsylvania Limited ran into some cars at Wellsville, O., which resulted in the death of the entire engine crew, which consisted of Elmer Jackson, fireman, John Carrolhois, a pilot, and Robert Jackson, the engineer.

Bath, N. Y., October 17.—A Delaware, Lackawanna & Western passenger locomotive fell over into the turn-table at this place this morning. Engineer James Clarke was badly injured.

Port Arthur, Ont., October 17.—A wreck occurred this morning on the Canadian Pacific Railroad near Grand River. A special train of cars collided with a freight train. Fireman Wilbridge was killed.

Lynn, Mass., October 19.—Walter S. Clarke, a fireman, fell from his train near Oak Island this evening, and was very seriously injured. It is thought that a blood-vessel of the brain is ruptured. He has been unconscious since being taken to the hospital.

Weigold, N. Y., October 19.—An Erie freight train was struck by a Syracuse & Oswego express at this point this morning. Engineer William Worrell, of the Syracuse train, jumped from his engine and badly sprained his left ankle.

Bavaria, Kan., October 19.—A freight train on the Union Pacific Railroad ran off the track here at midnight. Engineer Frank Schuyler was killed.

Evansville, Ind., October 20.—A Louisville, Evansville &

St. Louis passenger train ran through an open switch to Boonville to-night, wrecking an engine and several coaches. The fireman had his shoulder-blade broken.

Reading, Pa., October 20.—A passenger train on the Pennsylvania Railroad crushed into the rear end of a coal train at Seyfert's Station this morning. Frank J. Lewis, the fireman, was badly hurt.

Battle Creek, Mich., October 20.—A disastrous collision occurred on the Grand Trunk Railroad at this point early this morning. The engineer and fireman of the Pacific express, which ran into a Raymond & Whitcomb special train, jumped and escaped with slight injuries.

Binghamton, N. Y., October 20.—Patrick Neville, a fireman on the Erie Railroad, fell from his engine at Waverly to-day, receiving bad but not serious injuries, the chief of which was a severely sprained ankle.

Perth Amboy, N. J., October 22.—A collision occurred this afternoon in the Tottenville yard of the Staten Island Rapid Transit Railroad, in which Charles Bedell, fireman, was so severely injured that he may die from the effects. The accident was caused by a misplaced switch.

Pittsburgh, Pa., October 22.—A collision occurred between the Columbian express and an east-bound passenger train on the Pittsburgh, Fort Wayne & Chicago Railroad at Monroeville, Ind., this morning. Fireman Daley sustained severe internal injuries, and Engineer R. Cowan was badly scalded.

Birmingham, Ala., October 22.—A Georgia Central engine hauling a passenger train exploded its boiler 5 miles from this point this morning. Engineer Mills and Fireman J. W. Buchanan were killed instantly.

Chillicothe, O., October 23.—A locomotive hauling an express train on the Cincinnati, Hamilton & Dayton Railroad exploded its boiler near Raysville. Engineer F. M. Arnold and the fireman, F. Shields, escaped with a few cuts and bruises.

Trenton, N. J., October 25.—The second section of the Pennsylvania & Chicago Limited, on the Pennsylvania Railroad, ran into a freight train this afternoon at Bear Swamp, 3 miles east of this city. The freight had jumped the Pennsylvania track, and before the latter could be stopped the collision occurred. Engineer David Mahoney and Mathews, fireman of the Limited, were badly injured.

Batavia, N. Y., October 25.—William B. Nichols, a passenger engineer on the New York Central & Hudson River Railroad, was struck by a mail catcher standing alongside the track as he was leaning out of his cab window at this point to-day. He fell back to the floor of the cab unconscious. His skull was fractured.

Toledo, O., October 25.—A north-bound freight on the Toledo, Ann Arbor & North Michigan Railway ran into a sink-hole 3 miles north of Hamburg Junction this evening. The engineer, Beaulien, and Fireman Alberts were caught in the cab and burned to death before help could reach them.

Portage, Wis., October 26.—E. R. Crippen, an engineer on the Chicago, Milwaukee & St. Paul Railroad, was struck by a switching engine at this point to-day. Three ribs were broken, and he was badly bruised.

Salt Lake City, Utah, October 26.—A freight train on the Utah Central Railroad was derailed by spreading of rails near this city to-day. The engine was overturned, and steam and water belched forth from the boiler, severely scalding E. M. Heywood, the engineer.

Elizabeth, N. J., October 27.—A defect in some part of the boiler of a locomotive on the Central Railroad of New Jersey caused a blowing out of the steam and water at this point to-night. Engineer W. T. Taylor was severely scalded about the face, neck, and hands.

Worcester, Mass., October 27.—Harry Blaisdell, a fireman on the Worcester Division of the Consolidated Railroad, was struck square in the face by a heavy wooden joist protruding from a freight train, which stood on the siding near Woonsocket to-night. His face was fearfully mangled, and one side of the jaw-bone was splintered.

Newburg, N. Y., October 27.—Engineer Compton, of the New York, Lake Erie & Western Railroad, was leaning out of his cab window to discover the noise of a rattling under his engine, when he was struck on the head by a signal pole and knocked to the ground. His injuries were not of a serious nature.

Florence, S. C., October 27.—The Coast Line Fast Mail was wrecked at Salem early this morning. The switch lock was broken off and the switch set for the side track. The weather was very foggy, and the engineer did not see the danger until he turned into the switch. Engineer Joseph J. Jennings stuck to his post, and was bruised about the head and scalded about the leg. Fireman Gen. Burnett was bruised about the body.

Kenosha, Wis., October 28.—A passenger train on the Kenosha Division of the Chicago & Northwestern Railroad was thrown from the track by the pilot of the engine dropping down. The engineer, William Stewart, was scalded so badly that he died later this evening.

Somersville, S. C., October 30.—The New York fast freight, on the South Carolina Railway, ran into a cow three-quarters of a mile west of Jedburg to-night. The engine was completely turned around, and the 15 cars composing the train were all derailed. John S. Whaley, the engineer, was killed, and the fireman, named Holslander, was badly bruised.

Parkersburg, W. Va., October 30.—A passenger train on the Baltimore & Ohio Railroad ran into the rear end of a freight train near Chestnut Hill this evening. Fireman Kearnes was hurt, but not seriously.

South Meriden, Conn., October 30.—A passenger train on the New York & New England Railroad ran into a box car on the siding at this point this evening. The cause was a misplaced switch. The engineer, Baker, was thrown from his cab through a trestle to the ground about 20 ft. below, but was not seriously injured.

Newcastle, Pa., October 30.—Two engines were in collision on the Pennsylvania Line near Mahoningtown this evening. Lewis Styne, the fireman, and Jacob McLean, the engineer, were badly injured.

Norfolk, Va., October 31.—A collision due to an open switch occurred on the Lambert's Point Division of the Norfolk & Western Railroad this morning. The fireman and engineer were both killed.

Norwalk, O., October 31.—E. B. Squire, fireman on the Wheeling & Lake Erie Railroad, was severely injured at Massillon, by falling from his engine and striking his back and hips.

Rochester, N. Y., October 31.—The fire of an engine of a freight train on the New York Central & Hudson River Railroad burst through the furnace door near Cartersville to-day, burning Engineer Siener and Fireman Kemp very severely. The accident is said to have been caused by the netting on the smoke stack becoming clogged.

Honesdale, Pa., October 31.—Two coal trains on the New York, Lake Erie & Western Railroad collided near Rowland Station this evening. Peter Haddock, the fireman, was killed.

Our report for October, it will be seen, includes 62 accidents, in which 15 engineers and 13 firemen were killed, and 35 engineers and 23 firemen were injured. The causes of the accidents may be classified as follows:

Blowing back of fire	1
Boiler explosion	2
Bursting of steam-pipe	3
Collision	25
Derailment	7
Fell from engine	4
Land slide	2
Misplaced switch	7
Powder explosion	1
Spreading of rails	1
Struck by obstruction	4
Struck by train	4
Struck cow	1
	62

REPORTS OF DETENTIONS AND DEFECTS OF LOCOMOTIVES.

THE tabular Summary of Reports of Detentions to Trains from Defective Machinery on one of our prominent lines, which we published last month, has attracted a considerable amount of attention from locomotive superintendents and others in responsible places on some of our railroads. Naturally some inquiry has followed with reference to the methods of collecting and keeping such reports. We therefore give herewith the form of blank which is used on the New York Central Road for reporting detentions and the causes of them. These are sent to the general office and are there recorded and tabulated. On those roads where such reports have been kept, and have then been systematically arranged, it has been found that a flood of light has been thrown on the nature of the defects of machinery which cause detentions, some of which, before such investigations have been started, have not been suspected or their extent and significance has not been understood. The primary cause of a large proportion of accidents is a detention. Reduce the number of these, and it is as certain as mathematics that the number of accidents will be diminished. It is believed that there is no direction in which railroad managers could make investigations, which would be

so fruitful of good results, as a careful compilation of reports of the causes of detentions, such as we have given in the table referred to, would be.

The following is the blank used on the New York Central Railroad :

NEW YORK CENTRAL & HUDSON RIVER RAILROAD.

HARLEM DIVISION.

Engineer's Train Report.....*Division.*

Train No .....*Date*.....

Engine No.....*Number of Cars*.....

Leaving Time Card.....*Actual Time*.....

Arriving Time Card.....*Actual Time*.....

Engineer.....*Time Lost*.....

Fireman.....

CAUSE OF DETENTION, ETC.:

.....

.....

.....

It has also been found on the New York Central Railroad, and doubtless on other lines as well, that many of the men have an aversion to or apprehension of making a written report. They do not know how to express themselves correctly, and are afraid of revealing their ignorance in some way. They have not the same feeling about assenting or dissenting to or from any question relating to their locomotives or their duties. Acting upon this general idea, Mr. Buchanan has prepared a list of inquiries relating to the condition of the brake equipment on the engines on his road, and which merely require an × mark to indicate the condition of the part, or whether it performs its function properly. It is found that the men will report more willingly and fully if a blank of this kind is provided, than they would if required of their own volition to say what is wrong and what parts are in good condition. It has besides the advantage, which all catechisms have, that the question suggests an investigation into the condition of the part inquired about. If an engineer is asked whether the "throttle-valve of his air pump needs grinding," or whether "the brake-valve handle moves too hard," he will be more apt to find out whether such defects exist or not than he would be if they were not suggested by the question. His answer is readily given by making his × mark or omitting it. Those of us who were born with the alphabet on our lips, and into whose hands a pen was put almost as soon as we could grasp it, have little idea what a formidable matter it is for a person who has little familiarity with the three cardinal R's to express himself in writing.

We believe we are stating an exact fact in saying that there are many locomotive engineers who would rather encounter a collision on the road than to write a report of one. To such men a blank like the following for reporting the defects of their air-brakes is a great boon, and it is also an advantage to those who should have the fullest information concerning the condition of this part of the equipment of the roads for whose successful operation they are responsible.

NEW YORK CENTRAL & HUDSON RIVER RAILROAD COMPANY.

OFFICE OF THE SUPERINTENDENT OF MOTIVE POWER AND ROLLING STOCK.

October 1st, 1893.

WM. BUCHANAN, *Superintendent.*

ENGINEER'S DAILY REPORT OF REPAIRS NEEDED TO AIR BRAKE EQUIPMENT ON ENGINE NO.....

To the Despatcher of the Round House at.....

(Engineer's notation marked thus :—"X." Inspector's notation marked thus :—"O. K.") in column as shown.

	×	O. K.
Pump will not work		
Pump will not compress air fast enough		
Pump does not get oil enough		
Throttle valve needs grinding		
Regulator needs to be adjusted		
Regulator requires too great a reduction of air		
Engineer's brake valve, handle moves too hard		
Engineer's brake valve, rotary valve leaks		
Engineer's brake valve, piston valve leaks		
Engineer's brake valve, feed valve leaks		
Engineer's brake valve, handle spring is weak or broken		
Engineer's brake vale, reserve pressure is not right		
Piston travel, tender brake cylinder		
Piston travel, driver brake cylinder		
Main reservoir needs draining		
Auxiliary reservoir on engine needs draining		
Auxiliary reservoir on tender needs draining		
Train pipe drain cup needs draining		
Triple valve needs draining		
Triple valve needs		
Leaks, driver brake leaks off		
" tender brake leaks off		
" in brake pipe—train line		
" between pump and engineer's valve		
Hose, defective at front end of engine		
" defective at rear end of tender		
" between engine and tender, defective		
New shoes, on driver brake		
" on tender brake		
Brake cut out on engine account of		
Brake cut out on tender account of		
Air signal out of order		
Miscellaneous		

Engineer.....*Date*.....189

Inspected and repaired by.....*Inspector.*

Date.....189

NOTE.—Date, Name, Number, etc., must be shown when report is made, by both Engineer and Inspector, and the Inspector will be required to make a daily inspection of each engine, whether reported or not, and if any defects are found, not noted on report, the same must be repaired and marked O. K. in Inspector's column.

ENGINEERING SOCIETIES OF AMERICA.

(Compiled from a Table prepared by Professor J. B. Johnson, of St. Louis, December 21, 1892.)

Name of Society.	Date of Organization.	Total Membership all Grades.	Entrance Fee.	Annual Dues.	Number of Meetings Yearly.
National.					
American Society of Civil Engineers	1852	1,543	$30 00	$25 00 / 15 00	20
American Institute of Mining Engineers	1871	2,398	10 00	10 00	3
American Soc. of Mechanical Engineers	1881	1,582	25 00	15 00	2
American Inst. of Electrical Engineers	1884	643	5 00	10 00	10
Total	...	6,136			
Local or Sectional.					
Boston Society of Civil Engineers	1848	302	10 00	6 00 / 4 00	11
Engineers' Club of St. Louis	1869	180	10 00	10 00 / 5 00	18
Western Society of Engineers	1869	428	5 00	10 00 / 7 50	12
Engineers' Club of Philadelphia	1877	458	5 00	10 00 / 5 00	..
Civil Engineers' Club of Cleveland	1880	155	5 00	8 00	12
Engineers' Society of W. Pennsylvania	1880	420	5 00	7 00 / 5 00	20
Denver Society of Civil Engineers	1882	70	10 00	12 00 / 8 00	25
Engineers' Society of St. Paul	1883	45	5 00	4 00	8
Engineers' Club of Minneapolis	1884	30	5 00	5 00	10
Technical Society of Pacific Coast	1884	250	5 00	12 00 / 6 00	12
Canadian Society of Civil Engineers	1887	683	10 00	8 00 / 6 00	16
Montana Society of Civil Engineers	1887	54	5 00	10 00	12
Engineers' Club of Kansas City	...	49	5 00	8 00	9
Engineers' Club of Cincinnati	1888	128	1 00	5 00 / 3 00	12
Engineering Association of the South	1889	122	5 00	8 00 / 5 00	9
Wisconsin Polytechnic Society	1890	43	5 00	10 00	10
Engineers' and Architects' Club, Louisville, Ky	1891	74	10 00	18 00	12
Total	...	3,491			

—*Trans. Am. Inst. Electrical Engineers.*

GENERAL MARINE NOTES.

A Ship Canal Project.—Town Council of Bruges, in Belgium, has resolved to subsidize a company to the extent of 2,000,000 francs for the construction of a ship canal to connect the city with the sea. The object is to restore Bruges to her old-time commercial importance and make her a rival to Antwerp, Ghent, and other cities in the low countries having similar artificial waterways.

The French Warship "Jurequibberer."—This vessel, which was recently launched at Toulon, is a steel turret ship of 11,830 tons displacement. She is 356 ft. long, 72 ft. 8 in. beam, with a main draft of 27 ft. Her engines will be of 13,275 H.P., and her armament will consist of two 11¾ in., two 10½ in., eight 5½ quick-firing, and eight machine guns.

The Telephone for Diving Purposes.—The telephone is now used by deep-water divers. A receiver and transmitter combined is affixed to the inside of the helmet near the diver's ear. By a slight turn of the head he can speak into the 'phone, and he can hear readily from it at all times. Its value in deep-sea work, for reporting progress or receiving instructions, is clear. Formerly the only communication was by a system of pulls at a cord.

Electric Lights in Shore Defenses.—An interesting sham night attack was recently devised and carried out at Portsmouth, England. Besides the primary object, which was to determine how far the electric lights of shore defenses is efficient for the lighting up of vessels attempting to approach the harbor, the affair had something of the nature of a surprise, and was intended to test the mobilization scheme for the defense of the eastern entrance to Spithead. As far as observation went, the electric lights appeared too feeble for the purpose contemplated.

Test of Defense Nets.—The Ericsson submarine gun, the Destroyer, which was illustrated in our issue of May last, was tried against a heavy torpedo net at Newport, R. I., the latter part of October. The net tried was a nickle-steel American net that is in competition with the English net. The range and charge were the same, 200 ft. and 15 lbs. The heavier net was as easily and clearly cut through as the lighter American net had previously been done by the projectile. The shot was as true to its aim as it could possibly have been.

A Powerful Electric Lighthouse.—The electric lighthouse at the Cape of La Heve, about 3 miles from Havre, with an illuminating power of 23,000,000 candles, has been described and illustrated by the foreign technical press as the most powerful lighthouse in the world, but the engineer-in-chief of the French Lighthouse Service has now completed plans for a new lighthouse, of which the illuminating intensity will be equal to 46,000,000 candles. Its light will be sent 248 kilometers in clear weather, 100 kilometers in average weather, and 40 kilometers in foggy weather. This light will be located at Penmarck, a headland projecting into the Atlantic in the Department of Finistere.

Copper Plating Ships' Bottoms.—A new process of copper plating the bottom of war and other vessels has recently been brought out. It consists of dropping a sort of air-tight tank down the side of the vessel and copper plating the sides in sections, the intention being to overcome the difficulty and expense of dry-docking vessels of war. It is claimed that the whole of the bottom of a war vessel drawing 20 ft. of water can be plated from the water-line down complete in eight or nine days by using 60 baths at once on each side, with 780 H.P. shifting the baths two or three times. The plated surface would aggregate about 24,000 sq. ft., the estimated cost of which would be $6,660.

Battleship "Oregon."—The battleship *Oregon* was launched from the yards of the Union Iron Works, in San Francisco, on October 26. When she is completed and equipped her displacement will be 10,200 tons. Her length is 350 ft. 9 in., with a beam of 69 ft. 3 in., and 24 ft. draft. The armament will consist of four 13-in. breech-loaders, two each in a turret at either end. Their mounting is similar to that of Big Betsey and Alice on the *Monterey*, but they are larger in caliber by 1 in. There are also eight 8-in. breech-loaders and four 6-in. breech loaders located in sponsons. The secondary battery consists of 20 rapid-fire 6 pdr. and eight rapid-fire 1-pdr., four Hotchkiss rifled cannon, and six torpedo tubes. The midship section is covered with 18-in. armor.

Electric Lighting of the Bosphorus.—A plan has been proposed at Constantinople for lighting that city with electricity, and the whole of the Bosphorus from Cavak as far as San Stefano, upon the Sea of Marmora, by means of three powerful machines to be erected on three points of the Bosphorus where the current has an extraordinary force—that is to say, at Arnaout-Keui, Candilly, and at Serai-Bournou, at the entry of the coast port of the Sea of Marmora. The project has appeared to be so practical and realizable that a company of capitalists has been formed, the necessary funds subscribed, and a demand of a concession has been addressed to the Turkish Government. The latter, on the other hand, has taken the project into serious consideration, and, without losing time, has nominated a commission *ad hoc* to examine the details, and draw up an official detailed report.

Ship on Rollers.—Some of the English and French papers have recently been illustrating a proposed form of Atlantic greyhound, in which the vessel stands on eight rollers. It is designed by M. Bazin, who was the inventor of the Bazin dredge. It is proposed to construct an Atlantic liner on eight rollers, on the theory that these rollers will give far less resistance to the waves than the present form of steamship construction, and that, therefore, a higher speed may be developed, estimated at 30 knots per hour, from Southampton or Liverpool to New York. It is proposed to put the plan to a practical test by constructing a vessel of about 400 ft. in length by 100 ft. beam, with rollers 80 ft. in diameter. It is estimated that these will make 22 revolutions per minute, and that 10,000 H.P. will be required. It is hardly probable, however, that we are on the verge of a revolution in marine construction.

Bids for War Vessels.—The bids which were recently opened by the Navy Department for the construction of three light draft gun-boats of about 1,200 tons displacement each cover an appropriation in which the construction is limited to $400,000. The boats are to be designated as gunboats No. 7, 8 and 9 respectively. No. 7 is a flush-decked schooner-rigged steel gun-boat, not sheathed, with double bottom and close water-tight subdivisions at the water-line. Her length of water-line with normal displacement is to be 220 ft., and the

maximum breadth molded 36 ft. An average speed of 14 knots per hour for four consecutive hours will be required. Gun-boats Nos. 7 and 9 have been designed for a special purpose in rivers and shallow waters of China. Their length with normal displacement is 256 ft. 6 in., with a maximum breadth molded line of 40 ft. The lowest bid was from the Newport News Ship & Engine Building Company, for all three boats $280,000 each, or $290,000 for No. 7.

Double Gun Carriage.—A new form of gun carriage has recently been tested at the Naval Ordnance Proving Ground at Indian Head. Two guns have been mounted on a single carriage which is capable of turning the weapons together with one mechanism. The guns were 4-in. caliber, and were fired under all possible conditions. The results were eminently satisfactory, but the Ordnance Board is in doubt as to whether the advantages of the arrangement will offset the disadvantages. On the one side, the system has to commend it the lighter weight of two guns on one mount and the ability of having two projectiles where ordinarily but one would be delivered. Against these conditions is the liability of disabling two guns instead of one, for damage to the carriage would mean putting out of battle two weapons. The present carriage will probably be mounted on the forecastle or poop-deck of one of the ships of war. It is not likely, however, that the system will be extended to the Navy generally.

A Curious Railway.—Spain has a novelty in the way of a submerged railway. It runs through the surf at Oreton, near Bilboa, 650 ft. out into the ocean. The mines of Oreton are extremely rich in iron, but there is no harbor there, and great difficulty has hitherto been experienced in getting the ore to the ships. Now that the submerged railway has been built, it is a simple matter. It runs out into deep water, and an iron tower, 70 ft. high, worked by counterbalances, runs from the cliffs to the waiting vessels, which are moored, bow and stern, in the roadstead. When the tower arrives at the ship, its top, bearing the load of ore, is about level with the vessel's deck. As soon as the iron is loaded on the ship the weight of the counterbalances pulls the tower back to the cliff, where it runs up to a chute, and automatically opens its mouth. The chute comes down from the mines, and, when it has dropped on the tower enough ore to overcome the weight of the counterpoise, the tower starts away to sea again. This movement is kept up until the vessel is filled. All that is necessary to do to start the tower on its peregrinations and put the submarine railway in operation is for the miners to drop ore into the chute.—*Montreal Witness.*

Electric Hoists for Whalebacks.—A new departure is promised in connection with the proposed new ore docks for the whalebacks at Conneaut, O. Permanent bridges will span slips 100 ft. wide for the operation of electric hoisting machines. These bridges will be high enough to clear the decks of the whaleback barges by 30 ft. The design is for the steamers, which will tow two consorts each, to put her barges far into these great slips, and then to follow head in, the three passing under the trestle bridges, except that the stern of the steamer, with her stack, will be outside the outer trestle. The cars will then run directly over the hatches, dumping the ore on either side of the slip. After the power house is supplied with men, the electric hoists require only one man to a car. He travels with the bucket, and dispenses with the signal men and extra engineers and firemen required by the steam hoists The same power that propels the machinery generates light, so that the stock piles and the holds of the boats can be illuminated and the work carried on by night as well as by day.—*Evening Wisconsin.*

The Most Suitable Coal for Use on War Ships.—It has been shown that the true practical value of coals for steam purposes depends upon a combination of qualities which could only be elicited by carefully and properly continued experiments. These qualities, so far as regards steamships of war, are referred to as follows:

1. The fuel should burn so that steam may be raised in a short period, if this be desired; in other words, it should be able to produce a quick action.

2. It should possess high evaporative power—that is, be capable of converting much water into steam, with a small consumption of coal.

3. It should not be bituminous, lest so much smoke be generated as to betray the positions of ships of war when it is desirable that this should be concealed.

4. It should possess considerable cohesion of its particles, so that it may not be broken into small fragments by the constant attrition which it may experience in the vessel.

5. It should combine a considerable density, with such mechanical structure that it may easily be stowed away in a small space; a condition which in coals of equal evaporative values often involves a difference of more than 20 per cent.—*Coal Trade Journal.*

Trial of the "Columbia."—The official trip of the cruiser *Columbia* was held off the coast of Massachusetts on November 18, where the remarkable speed, at one point of the run, of 25.31 knots was attained, giving an average speed of 22.81 knots over a course of 82.82 nautical miles. Inasmuch as her contract speed was 21 knots, with a premium of $50,000 for each quarter knot in excess, it is probable that when the official records are published, it will be seen that the Messrs. Cramp will be allowed a bonus for seven quarter knots in excess, or $350,000. The maximum revolutions of her propellers was about 138 on the port and starboard engines, and 132 on the after engines. Her average steam pressure was 155 lbs. to the square inch, developing 21,500 H.P., and burning about 30 tons of picked Pocahontas coal an hour while running over the course. The vessel was run under a forced draft on the closed fire-room principle; the crew in the engine-room consisting of 264 men. The *Columbia* thus becomes the swiftest sea-going vessel afloat, the nearest approach to her in point of speed being the warship *Neuve de Julio*, owned by the Argentine Republic, which was built by the Armstrongs. Her greatest speed was 22.74 knots. The differences in the tests, however, are very greatly in favor of the *Columbia*, inasmuch as she ran for nearly 100 miles without any slowing down, while the *Neuve de Julio* ran for only 22 miles. It is probable that, were the same rules to govern trials in this country as obtained abroad, the *Columbia* would be rated as a 25-knot ship, for she attained more than this speed over an 8-mile stretch. The requirements, however, in this country are higher than elsewhere. The arrangements of the engines and boilers in the *Columbia* are practically the same as those of the *Minneapolis*, which were illustrated in our issue of September of this year.

Spanish Cruiser "Infanta Maria Teresa."—The latest addition to the Spanish Navy is one of a class of cruisers, for the construction of which the Government four years ago granted an extraordinary credit of about $50,000,000. It was built in Spain at a shipyard and engine building shop of which the country is very proud, although it was created almost entirely by English influence, imported its machinery from England, from which country also it still draws its chief workmen. The *Infanta Maria Teresa* is built entirely of Siemens-Martin steel. It is 340 ft. long between perpendiculars, 364 ft. over all, 65 ft. breadth of beam, 28 ft. deep, and of 7,000 tons displacement on a draft of 21 ft. 6 in. It has a ram bow and two military masts, with signaling yard crossed on each. For 315 ft. amidships the vessel has a 12-in. cammell steel armor belt 5 ft. 6 in. broad, backed by 6 in. of teak. The ship has eight torpedo tubes. The principal armament includes two 28-cm. guns mounted in barbette turrets, ten 14-cm. guns, two 7-cm. guns, eight 57-mm. Nordenfeldts, two 11-mm. Nordenfeldts, and eight Hotchkiss. The propelling engines are of the vertical triple-expansion surface-condensing direct-acting type, driving twin screws, and are designed to develop collectively about 13,500 indicated H.P. with forced draft, the contract speed for which is 20 knots. The cylinders are 42.62 and 92 in. diameter by 46 in. stroke. There are over 50 separate and auxiliary engines in the vessel. The propellers are three-bladed, of bronze 16 ft. 5 in. in diameter and 20 ft. 6 in. pitch. Steam is supplied by four double-ended boilers 16 ft. 3 in. in diameter, and two single-ended boilers 15 ft. 3 in. long by 10 ft. 6 in. in diameter, working at a pressure of 150 lbs. to the square inch, the test pressure being 250 lbs. The grate surface is 845 sq. ft.; tube surface, 22,270 sq. ft.; total heating surface, 25,920 sq. ft.

Police Boat for New York Harbor.—There is being built at the yards of the Marine Department of the Maryland Steel Company, at Sparrow's Point, near Baltimore, a twin-screw steel steamer for the Police Department of this city. This vessel will be named *Patrol*, and will be used for police work in and around the harbor of New York.

The dimensions of the boat are:

Length over all	143 ft. 6 in.
" between perpendiculars	135 "
Beam	23 "
Depth amidships	10 " 6 "
Draft of water, forward	6 "
" " " aft	8 "

The material used is all mild steel, the plating being put on in six in and out strakes, averaging about 15 lbs. per square foot. The bar keel is 6 in. × 1½ in., and stem is 6 in. × 1½ in. The stern-post is of cast steel 6 in. × 3 in. at the top, tapering to 1½ in. at heel. The frames are angles 3 in. × 2½ in., spaced

21 in. between centers. The reverse frames are 2½ in. × 2½ in. The bilge, keelson, and hold stringer are double angles 3 in. × 2½ in. Forward at the water-line the plating is doubled as a protection against ice.

The engines consist of two compound surface-condensing, inverted direct-acting, operating twin screws 6 ft. in diameter by 9 ft. pitch. The cylinders are 13 in. and 24 in. respectively for the high and low-pressure by 18 in. stroke. The air-pumps are worked by low-pressure cross-heads. The circulating pumps are of the centrifugal type worked by independent engines. The main engines are reversed by steam, and so arranged that one man can control both of them.

The high-pressure cylinders are equipped with a piston-valve, and the low-pressure with a double-ported slide-valve of the Trick pattern. Steam of 120 lbs. pressure will be furnished by two boilers of the gunboat type 17 ft. 6 in. long × 7 ft. 9 in. diameter. Thickness of shell, ½ in.; heads, ⅝ in. Each boiler has two corrugated furnaces 36 in. diameter × 7 ft. 6 in. long, and seventy-eight 3 in. tubes and seventy 3½ in. tubes. The engines and boilers are so piped as to guard against total disability in case of ordinary accident. The main engines are expected to develop 500 indicated H.P., and should drive the boat at about 16 statute miles per hour.

There is a large deck-house arranged on the main deck. At the forward end there is a handsome saloon containing the main companion-way. This saloon is finished in ash. Abaft this saloon are the mess-room for the crew, pantries, store-room, and a large galley. The upper engine-room is finished in red oak and white bass, and abaft the engine-room is a large ladies' saloon finished in butternut. Opening off this saloon are two state-rooms with a toilet-room. On the top of the deck-house is a pilot-house and a smoking-room, both finished in mahogany. On the berth deck forward is the forecastle, and separated from this by a bulkhead is the main dining saloon, about 12 ft. × 20 ft. On each side of the companion-way leading to this saloon are two large double state-rooms for guests and four single ones for the captain, mate, chief engineer, and first assistant.

The boat is handsomely furnished throughout, and will make a noteworthy addition to the fleet of New York Harbor. The boat is divided by four water-tight bulkheads, and is equipped with a steam steering-gear and a complete electric lighting system, including a 4,000-candle power search light.

There is also a Worthington duplex fire-pump 14 × 9½ × 10, designed expressly for this boat, which can be used as a wrecking pump when desired. It has a capacity of 48,000 galls. of water per hour. There are two masts 60 ft. long of 12 in. diameter.

The total cost of the boat will be about $55,000, delivered in New York Harbor. This price is very cheap when compared with boats of similar character, and the Police Department is to be congratulated on its purchase.

PROCEEDINGS OF SOCIETIES.

Civil Engineers' Club of Cleveland.—A monthly meeting of this Club was held on October 10, and a paper on the Cam and its Importance in Modern Development of Manufactures read by Mr. F. H. Richards, of Hartford, Conn.

Boston Society of Civil Engineers.—The regular meeting of the Society was held on the evening of November 15. A paper by Arthur W. Hunking was read, entitled Notes on Water Power Equipment and Considerations affecting the Selection of a Turbine.

Place of Meeting of the Master Mechanics' and Car-Builders' Associations Next Year.—The Joint Committee of the two Associations has decided on Saratoga, N. Y., as the place for the next Convention. Mr. R. C. Blackall, of the Delaware & Hudson Canal Company, is Chairman of the Committee of Arrangements; Mr. S. A. Crone, of the New York Central Line, will represent the Car-Builders' Association, and Mr. Thomas Purves, Jr., the Master Mechanics on that committee. Application for rooms should be made to Mr. H. S. Clements, Manager of Congress Hall—where the Associations will meet—for rooms.

American Society of Mechanical Engineers.—The annual meeting of this Society will be held at its house, No. 12 West Thirty-first Street, from December 4–8. The first session will be held on Monday evening, at which Mr. Eckley B. Coxe, the President, will deliver the presidential address, after which there will be a social reunion. The regular business and professional sessions of the meeting will commence on Tuesday morning, and be held in the morning and evening of Tuesday and on the mornings of Wednesday, Thusday, and Friday.

The following is a list of papers which will be read: A. K. Mansfield, The Buckeye Engine Valve Gear; R. H. Thurston, The Maximum Contemporary Economy of the High-pressure Triple-expansion Engine; George A. Morison, Expansion Bearings for Bridge Superstructure; Barton Cruikshank, A Device for Drill-jigs; Frederick A. Scheffler, A Curve Delineator; Frederick W. Taylor, Notes on Belting; R. C. Carpenter, Some Experiments on the Effects of Water Hammer; R. C. Carpenter, Constants for Correcting Indicator Springs which have been Calibrated Cold; W. S. Aldrich, The Use of the Indicator in Dynamometric Testing; R. C. Carpenter, A New Form of Prony Brake; D. S. Jacobus, A Comparison of Mean Effective Pressures of Simultaneous Cards Taken by Different Indicators; H. L. Gantt, Recent Progress in the Manufacture of Steel Castings; William A. Pike, Steam Piping and the Efficiency of Steam Plants; Charles H. Manning, A Method of Manufacture of Large Steam-pipes; James B. Stanwood, Strength of Rim-joints in Fly-band Wheels; R. C. Carpenter, Experimental Determination of the Effect of Water in Steam on the Economy of the Steam-engine; F. A. Scheffler, Test of a Boiler using Grates with a Small Percentage of Openings; William A. Rogers, The Cumulative Errors of a Graduated Scale; William H. Francis, A Modern Disinfecting Plant; W. S. Crane, Crucible Furnace using Petroleum; David Guelbaum, Theory of Direct-acting Steam Pumps.

On Wednesday evening there will be a reception at Sherry's, Thirty-seventh Street and Fifth Avenue.

Engineers' Club of Philadelphia.—At a meeting of the Club on November 18 a paper was read by Mr. Pierre Giron on the Grinding of Portland Cement. He stated that when well-burned Portland cement is fresh from the kiln, it presents itself in the shape of black or greenish-black clinkers of great hardness and density. The agency of powerful machinery is required to bring these clinkers to the state of very fine powder. Even after the most thorough grinding the powder is still gritty, owing to the presence of fine grains which have not been reduced to an impalpable powder. Until a few years ago the fineness of grinding was considered of secondary importance, but lately it has become one of the essential qualities of slow-settling cements.

The first operation consists in breaking up the large lumps of clinkers. For this a jaw-crusher of the Blake type is generally used. The product of this crusher is still too large for the final operation of grinding, and an intermediate process is necessary to further disintegrate the material. This is done in most American cements by a pot-cracker or coffee-mill, but the general use of crushing rolls in other mining industries of the country will eventually lead to their adoption by cement manufacturers.

The final grinding is done almost universally with millstones. The stones are of a special quartz formation, and from 4 to 5 ft. in diameter. They weigh over a ton each, and last about a year. The European practice is to run the upper stone at 90 to 120 revolutions per minute, and when working under favorable conditions it may be estimated that an expenditure of 30 to 35 H.P. will give a ton of finished cement per hour. The practice in America is somewhat different. The millstones are smaller, generally not more than 36 in., the upper being stationary, while the lower is driven at a very high speed, sometimes over 300 revolutions. The cost of grinding in this country is greater than in Europe, and the cement is not, as a rule, as finely ground.

The efforts made to supersede the millstones have resulted in the adoption by several cement works in Germany of the Jewish ball-mill. In this country the Griffin mill in its improved form has been adopted by some cement makers. A successful grinding machine should be capable of developing great power, and its mechanical construction should be such as to produce the maximum effect for an unlimited time with the least wear and tear. These conditions imply simplicity and massiveness. The pulverizers of the present day are more or less deficient in these requirements. This circumstance has led the author to take part in the efforts that have been made to solve the problem. His researches have culminated in the construction of the Morel Ball Pulverizer, of which illustrations have been prepared to accompany this paper. The principle of this mill is one in which the grinding is accomplished partly by percussion and partly by pressure. The principal part is a large steel ring having a concavity in its inner side, in which spherical balls are made to fit loosely. These balls, 9 in. in diameter, are four in number, and made of solid forged steel. They are located between the arms of a dividing armature, also made of steel, and set on the vertical

shaft placed in the center of the mill. A circular screen is placed over the ring, allowing the finely ground material to pass through the holes, and rejecting the coarse part under the balls. The material is introduced from an automatic feeder located on the mill itself. The pulverizer complete weighs over 9 tons, of which nearly 5,000 lbs. is specially-treated steel. It is believed to be the largest grinding-machine ever built.

Technical Society of the Pacific Coast.—At a recent meeting of the Society Admiral Selwyn read a paper on the Existing State of the Fluid Fuel Question, in which he stated that he had been engaged in working upon the problem of burning oil since 1867, and that the results which he obtained were certainly very remarkable, in that no change was required in the furnaces, stating that any engineer can pull out his coal grate and put the oil-burning furnace in in 48 hours at the most, and it will not take much longer to make the injector and fit the pipes and tank. It can all be pulled out and the boiler be burning coal again in 24 hours.

In making a comparison between oil and coal as a fuel, he states that, owing to the fact that the atoms of the oil are more widely separated than those of coal, less work is required in effecting their union with oxygen, and instead of six units, less than four will be wanted. Owing also to the hydrogen present, the theoretic calorific value will be 21 instead of 16; 21 less four leaves 17 units for evaporative duty instead of 10, and 16 9 lbs. of water were, in 1869, actually evaporated per pound of oil used in experiments with a boiler of 160 nominal H.P., burning heavy oil of lubricating quality, and having a specific gravity greater than salt water. The experiments lasted nine months and were undertaken for the British Admiralty, being under the close supervision of their own engineer the whole time.

There is a most important difference between the blowing in of oil by means of steam as compared with blowing in with air, which is not by any means generally understood. The steam contains hydrogen, and the air does not. One lb. of steam (considered as water) is required to blow in 1 lb. of heavy oil at common pressures, up to 50 or 60 lbs. on the inch, less as that pressure is increased. This has been complained of by some persons, as if it were a heavy tax on the boiler using oil. But as a fact, for which I can vouch, each pound of steam so used produces the full calorific effect due to its hydrogen, and adds to the duty of the oil fuel seven more units of heat, bringing the evaporation up to 22 or 23 lbs. of water (measured from the supply tanks) per pound of oil and steam burned. The hydrogen, finding incandescent carbon in the furnace unites with it to form hydro-carbon, and is then burned with the above useful effect. Roughly, in this manner, there can be obtained three times the evaporative duty of the best steam coal. Now the hydrogen, being a gas, is "fluid," but not "liquid" fuel. Being a gas the loss in dissociation is not more than one unit of heat, and it readily combines oxygen, as we know from the oxy-hydrogen blow-pipe, to produce intense heat. We have therefore entered on the use of pure gaseous fuel derived from water, and automatically produced.

At any rate, I have long ago seen it burned, and burned it myself under ordinary marine and Cornish boilers with a result of measured evaporation from oil, hydrogen, and nitrogen together, of no less than 48 lbs. of water per pound of oil used, plus the above gaseous substances, which cost just nothing at all.

This is six times the power of evaporated, "or calorific value," of the best steam coal, and will enable future engineers to drive a steamship round the world, or a railway train across the continent, at full speed, with one supply of fuel weighing no more and occupying less space than a single supply of coal.

I am not yet prepared to give full information as to how the nitrogen is burned, nor as to higher duty than six times coal, which is no doubt possible, but no changes are needed in the furnace, or the injector shown, nor any other which cannot easily be carried out by a ship or railway engineer. All the data I have given are taken from notes made during the actual working, and were checked by civil and naval engineers, to whom my work was always openly shown, is as far as I could be certain of the causes and effects. Of course I drew many inferences, which I am slow to bring forward till everything can be tested and proved to complete demonstration, knowing well how necessary such caution is before asserting a new truth or science, or indeed any departure from long-established practice, however absurd it may become in the light of later discoveries. As far back as 1869 I had not only heard of but carefully examined cases of high evaporation, but I could never find any one who knew what cause to assign it to, till I actually saw in my own furnace the apple-green flame of burning nitrogen, as described by some of the older chemists (who knew well that it was a combustible of great power, though gun-cotton and dynamite had not then been invented), and got 48 lbs. of water evaporated per pound of oil used by the assistance of the hydrogen of the steam and the nitrogen of the air. These latter, then, their nature and their effects have justified. I submit the new nomenclature; I have used "fluid" instead of liquid fuel, for while all liquids and all gases are fluid at our ordinary atmospheric pressure, the gases are not liquids, and such a compound fuel as I have been describing cannot properly be comprised under the term of liquid fuel.

In the discussion that followed it was very evident that the members were somewhat doubtful as to the accuracy of the results which had been obtained, and it was shown that other experiments in oil burning, especially those of the *Solona* and other ferry-boats which were used in San Francisco Bay, did not show the economy and the great advantage which was claimed for burning of oil in these boilers.

PERSONALS.

MR. P. T. LONERGAN has been appointed Master Mechanic of the Rome, Watertown & Ogdensburg Railroad, vice Mr. GEORGE H. HASELTON.

MR. J. T. ODELL, late General Manager of the Baltimore & Ohio Railroad, has been elected Vice-President of the New York & New England Railroad.

MR. JAMES BUCHANAN has been appointed Assistant Superintendent of Motive Power in charge of divisions east of Syracuse on the New York Central & Hudson River Railroad.

MR. E. H. BECKLER, late Chief Engineer of the Pacific extension of the Great Northern Railway, has been elected an honorary member of the Montana Society of Civil Engineers.

MR. GEORGE H. HASELTON has been appointed Assistant Superintendent of Motive Power in charge of divisions west of Syracuse, on the New York Central & Hudson River Railroad, vice Mr. J. D. CAMPBELL, resigned.

MR. R. B. CAMPBELL, General Superintendent of the Trans-Ohio Division of the Baltimore & Ohio Railroad, has been appointed General Manager to succeed Mr. J. T. ODELL, who resigned. This appointment took effect on November 1.

PHINEAS DAVIS.

IN 1831 the Baltimore & Ohio Railroad Company offered a premium of $4,000 "for the most approved engine which shall be delivered for trial upon the road on or before June 1, 1831; and $3,500 for the engine which shall be adjudged the next best." The requirements were as follows:

"The engine, when in operation, must not exceed 3½ tons weight, and must, on a level road, be capable of drawing day by day 15 tons, inclusive of the weight of wagons, at 15 miles per hour."

In pursuance of this call upon American genius three locomotives were produced, but only one of them was made to answer any useful purpose. This engine, *The York*, was built at York, Pa., and was brought to Baltimore over the turnpike on wagons. It was built by Davis & Gardner, and was designed by Phineas Davis, of that firm, whose trade and business was that of a watch and clock maker. After undergoing certain modifications it was found capable of performing what was required by the company. After thoroughly testing this engine, Mr. Davis built others which were the progenitors of the "grasshopper" engines which were used for so many years on the Baltimore & Ohio Railroad. It is a remarkable fact that some of these are still in use on that road, and have been in continuous service for over 50 years, which is probably the longest active life of any existing locomotives.*

Notwithstanding the fact that Phineas Davis was one of the earliest and most ingenious constructors of locomotives in this country, very little has been known of him until quite recently. Some months ago Mr. John C. Jordan, a resident of York, Pa., interested himself in the subject, and prepared an account of the life and achievements of Davis, which was published in the *Gazette*, a daily paper published in that place, from which Mr. Jordan has kindly permitted us to republish the following extracts:

"Phineas Davis was born in Grafton County, N. H., and was the son of Nathan and Mary Davis.

"He came to York when he was about 15 years old, poor, friendless and unknown. He presented himself barefooted, wearing a straw hat, and a bundle under his arm, to Mr. Jona-

* From an article in *Scribner's Magazine* of August, 1888.

than Jessup, a clock and watch-maker, asking for employment. Mr. Jessup was struck with his intelligence, and employed him at once. He remained here until he was 21 years of age, and attained to great proficiency in his business. Mr. Davis had the reputation among those who knew him of being very reliable and ambitious. Toward the close of his service with Mr. Jessup as a watch maker he made a miniature gold watch of beautiful design about the size of a dime, which was an excellent timepiece, and attracted much attention as being a remarkable production. This watch afterward came into possession of his son, Willis Davis.

"Mr. Davis became a member of the Society of Friends July 5, 1815. He was married on November 15, 1826, in the Friends' meeting-house in York, to Hannah Taylor. He had by this marriage two sons, Willis and Nathan. Willis was appointed an engineer in the U. S. Navy, and afterward entered the Confederate service. Nathan enlisted in the Union Army, and lost his life in Virginia.

"Mr. Davis, being an inventive genius, next turned his attention to the manufacture of steam engines, and formed a partnership with Mr. Israel Gardner, under the firm name of Davis & Gardner, in a foundry and machine shop.

"The first production of this firm of any importance was the iron steamboat *Codorus*, which was launched on the Susquehanna River about 1828."

Of this steamboat very little is known. In another article, published in the same paper from which we have quoted, Mr. Jordan quotes from a letter received from Colonel Granville Haller, a native of York, but now a resident of Seattle, Wash. He was born in 1819, and in his letter to Mr. Jordan says:

"The subject recalls to memory my witnessing the steamboat *Codorus* on wheels passing along Main Street, York, and when it reached the market square the width of the passageway was insufficient for the boat to get through, owing to an awning frame, whose supporting posts stood at the curbstones in front of the Demuth store, at that time in the Stair Building on the northwest corner of Main Street, when the awning was torn down without ceremony to enable the elephant to pass through at that corner. I was then a boy about 9 years of age.

"Small as I was, Mr. Davis in those days enjoyed an enviable reputation, among even the boys, as an ingenious mechanic as well as an inventor—also a Mr. Grimes (?)—I think that was his name. The former to us was a 'Big Injun heap'! —somebody above the ordinary run."

Another correspondent, General William B. Franklin, now a resident of Hartford, Conn., wrote to Mr. Jordan:

"I remember hearing about the steamboat *Codorus*, which, if my memory serves me, came to a sudden end by the bursting of her boiler."

Continuing his account of Mr. Davis's life in the York *Gazette*, Mr. Jordan says:

"In January, 1831, the Baltimore & Ohio Railroad Company issued an advertisement offering liberal inducements to the mechanical skill of the country for the production of coke or coal-burning locomotive steam engines. In response to this call upon American skill, three engines were offered in competition. The engine selected was called *The York*, constructed by Phineas Davis at the establishment of Davis & Gardner, on South Newbury Street. This engine was accepted as the best and put into active use on the railroad. As this was the first coal-burning locomotive steam engine ever built in the United States, York has the undoubted claim to that honor.

"The York *Gazette* of February 1, 1831, contains the following notice of the offer of the Baltimore & Ohio Railroad Company for steam engines:

LOCOMOTIVE STEAM ENGINES.

"'The Baltimore & Ohio Railroad Company being desirous to obtain a supply of American manufactured engines for their railroad, offer $4,000 for the most approved engine which shall be delivered for trial on their road on or before the first day of June next, and $3,500 dollars for the second best.

"'The engine must burn coke or coal, and consume its own smoke; it must be capable of drawing 15 tons at 15 miles an hour; it must not weigh more than 3½ tons; the pressure of the steam not to exceed 100 lbs. to the square inch; less pressure is preferred.

"'Davis & Gardner have been engaged in building an engine for some time past, and expect in the course of 10 or 15 days to have it conveyed to the city of Baltimore. We look forward to the trial with anxiety.'

"The York *Gazette* of February 15, 1831, has this notice of the day on which the locomotive will be taken to Baltimore:

"'The locomotive steam engine made by our citizens, Messrs. Davis & Gardner, is placed on runners, and will leave York for Baltimore this day.

"'Those of our citizens who have not visited it during its construction will not be less surprised to see it pass through the streets than they were some years since on beholding the iron steamboat *Codorus* making a similar passage. On its arrival at Baltimore, it no doubt will be received with applause and be followed by crowds to its place of destination.'

"Phineas Davis soon after became Manager of the Baltimore & Ohio Railroad shops. The first steel springs used in this country were placed upon *The York*, Davis's locomotive and tender, in September, 1832, under the superintendence of Mr. Davis.

"Mr. Davis was killed by an accident on the Baltimore & Ohio Railroad between Baltimore and Washington, on his return from Washington, where he had gone on the trial of an engine on September 27th, 1835.

"The York *Gazette* of October 10, 1835, published an obituary, copied from the Baltimore *Patriot*."

After relating the principal events of his early life, it is said:

"'Being endowed with inventive talents and industry of thought, and the bias of his mind leading to investigation into the principles of things, Mr. Davis next turned his attention to chemistry; soon, however, he applied himself to the science of steam, and as a consequence to the construction of steam engines, in which he took great delight. He pursued the business in that town for several years, making many experiments the while, tending to develop and illustrate the capabilities and power of that mighty agent, steam, and thus to serve a public end, though without materially advancing his private interests. He, in connection with his partner, built several steam engines, of various power and for various purposes, while prosecuting the business at York. In these the hand of improvement was constantly visible. Mr. Davis was literally a self-taught man, and, like all eminent men of that class, in whatever department of science or the arts, he was capable of achieving the most decisive results. Such men do not rest satisfied with existing improvements, but making the best use of their capabilities, and with all the past for a study, they go on with a steady and certain progress in carrying their several pursuits to a higher and yet higher degree of improvement and usefulness.

"'Such in an eminent degree has been the case with regard to Mr. Davis and his investigations connected with steam engines. The first efficient locomotive used upon the Baltimore & Ohio Railroad was constructed by Davis & Gardner, under his order and direction, at York, and brought here upon wagons; since then a large number of locomotives have been built for this great work, as also for the Washington Railroad, under Mr. Davis's immediate superintendence, and scarcely any one ever succeeded another without evincing some improvement in design or execution, and thus exhibiting the evidence of his profound reflection and high mechanical skill. The construction of locomotives was a business particularly suited to his taste and capacity. And the railroad company very soon discovered his value in that department, and offered such facilities as induced him to leave the concern at York in the care of his partner and engage in the work of making engines here in the immediate vicinity of the road. He had been so engaged for a couple of years, and by his talents, industry, and perseverance, under the liberal encouragement of the company, he had by successive improvements brought the locomotive to a high degree of efficiency. His mechanical aptitude and habits of study never flagged, but were true and available to the end. Their results were shown in some useful improvements exhibited in the last locomotive made under his direction, and finished for the Washington Railroad a few days ago.

"'It was after a successful trial of this engine on his return from Washington, whither he had given the numerous hands in his employ the gratification of a ride, that the accident occurred which brought his useful life to a sudden and melancholy termination. It arose from no fault of the engine or imprudence of its builder, but was the result of a casual and unseen defect in the railway. One of the chains had become broken, and the end of a rail being thus misplaced, caught the flange of the engine wheel and threw the engine off the track. The deceased was in the tender, where he had placed himself for the better observation of the working of the engine. A rapid progress at the moment of the accident brought the cars in the rear with great force upon the tender, and this in turn upon the engine. The perilous contact dashed the tender in pieces and in the same instant, it is hardly known how, so sudden was the catastrophe, deprived of life its solitary occupant. The assistant engineers who were on the locomotive, and the passengers, were uninjured. The remains of the deceased were brought into town on the afternoon of the accident and interred on the afternoon of the 28th in the Friends' burying-ground in Old Town, in the presence of a large group of sorrowing friends.

"'Mr. Davis was married some years since at York, and has left two orphan children of tender years in the care of a distant relative of their mother, now no more. The death of their last parent makes them orphans indeed. He leaves them, perhaps, a moderate portion of this world's goods, but the enduring legacy of a useful and blameless life and an example rich in the elements of instruction. For he was truly an estimable man in all the various relations binding him to society. And however highly he was valued as a mechanician, not less exalted was the estimate of his qualities as a man. However marked his usefulness and deep the regret at his loss, in a professional point of view, no less auspicious shone the amiable qualities of his mind and heart upon the circle of his friends, and no less profound will be their sorrow at this sudden removal of the individual. While they deplore his premature end, they will not cease to cherish his memory as that of one who possessed so many titles to the affectionate regards of his fellowmen. To close, in the language of an early friend who knew all his value, who long went step by step with him, in striking out new combinations in practical science and adding new trophies to human skill: Though his loss to the great field of mechanical improvement will be deeply felt, the community will suffer a greater loss in the impressive example of his excellent life.'

"Notwithstanding this statement of the remains of Mr. Davis having been interred in the Friends' burying ground in Old Town, Baltimore, he was buried in York. I found in the records of the Friends' meeting-house, in York, an entry in the handwriting of Jonathan Jessup recording the interment of Phineas Davis in their burying-ground in York, Pa. His grave is unmarked and unknown."

THE GERMANS AS DRUMMERS.

MR. J. C. MONAGAN, United States Consul at Chemnitz, reports to the Bureau of Statistics at Washington that "the present time is full of plans to open up foreign markets to German machines. This is due to their success at Chicago. To find out what is wanted in South American and African markets it is proposed to keep agents on the ground all the time, or send qualified agents at regular and frequent intervals of time. These agents must be men capable of studying the questions, not superficially, but practically and scientifically. It is only possible for men educated in technical branches to make such a study

"Engineers are to be sent to Brazil, La Plata, Mexico, Chile, Peru, and other South American States. The purpose is to 'drum up' trade. The costs are to be proportioned to the number of persons employed by the factories sending the engineers. It is hoped that enough will subscribe to keep the cost down to 50 or 75 cents per person employed. As an aid to the engineers, vast numbers of illustrated machine-explaining catalogues, printed in Spanish and the various languages of the people or colonists among whom they are to circulate, are to be sent before and after the engineers. Thus far, wherever and whenever the propositions to send engineers and catalogues have been discussed they have been voted for unanimously. The Foreign Office and the Prussian Minister of Commerce have expressed a lively interest in the movement, and have promised it aid. Nineteen firms, representing 7,506 workmen, have already subscribed. It is expected, so popular is the matter becoming, that many more will soon join. It is also proposed to have the engineers take orders for iron and steel products wherever they go whenever they can. This will help to keep down the costs to those taking part, and will permit of a much larger number of engineer agents being sent. The number, it seems, is to be limited only by the subscriptions. Everything about the plan commends it to the thoughtful consideration of our people as well as to the Germans."

Our consul adds, "Let us also, then, send out engineer agents —men trained in mechanics, and able to speak Spanish, French, or other languages. Let them carry catalogues and commissions to sell anything, from a paper of pins to a Corliss engine. Let our manufacturers, emulating the Germans, unite to pay the expenses. Let great efforts be concentrated in places offering a market."

We will remark that the AMERICAN ENGINEER goes to all foreign countries in which there is any trade which might be obtained for this country. Therefore an advertisement in its pages is a monthly messenger dispatched to all parts of the world, and will cost much less than 50 or 75 cents for each person employed.

Manufactures.

A CONVENIENT DRAWING PEN.

THE engraving below represents a very handy drawing pen, which is manufactured by the Bennett Manufacturing Company of 1510 Chestnut Street, Philadelphia. Every draftsman has experienced the inconvenience of changing the "nibs" of his pen to draw heavy or light lines at will. In the instrument which is illustrated, this can be done instantly without adjusting the screw which regulates the width of the lines. The screw *a*, by which the distance apart of the blades of the pen is regulated, instead of passing through the upper blade loosely and screwing into the lower one, as in ordinary drawing pens, is screwed into the upper blade and merely bears against the lower one. By turning this screw the blades are thus separated any desired distance. The minimum distance apart of the nibs of the pen is thus adjusted by this screw, but they can be sprung wider apart by means of a sort of trigger *c*, which is attached to the upper blade. The maximum distance which this may be moved is in turn adjusted by the screw *b*, which bears against the under side of *c*. By these means the narrowest or finest line that it is desired to draw is determined by the adjustment of the screw *a*, and the greatest width of line is regulated by the screw *b*. In using the pen the fine lines are drawn in the usual way. When a heavy line is required the nibs are separated as far as the screw *b* will permit by pressing with one finger on the trigger *c*. This arrangement has also another advantage—when the ink dries slightly at the nibs of the pen, they may be agitated by pressing several times on the trigger *c*, and the ink can thus be made to flow freely so long as it is liquid.

These pens, made by the Bennett Company, have aluminum handles, and are of excellent workmanship, and will be found a great "boon" by draftsmen who use them.

A CONVENIENT DRAWING PEN,

NOTES ON LONG GUNS.

IN *La Marine de France* is an interesting article on long guns generally, and the construction work of M. Canet more particularly. Without endorsing everything that is said in this article, we think that certain portions deserve great consideration. On the question of the guns' power of resistance, the writer observes that exaggerated fears have been expressed as to the effect of gas wave pressure. In the first place, the shocks to which the gun is subjected are not greater in a long than a short piece, if the pressure is kept within admissible limits—namely, 2,400 kg. or 15.2 tons per square inch. The same is true of the effect produced by erosion, which undoubtedly is the real cause of guns wearing out. Vibrations may be specially injurious to guns built up and composed of many elements, especially if not perfectly adjusted to each other by shrinking on. Displacements are no doubt often produced among hoops, which is one of the reasons why the new guns of great power made in France have but few elements and complete compactness, and their great length does not affect the question of resistance. Flexion or contortion of tube has given trouble in some navies, even with guns of medium length. The 110-ton guns of the *Benbow* and *Sanspareil* took a twist of double curvature, for which it was necessary to allow in aiming the gun at any object. The Krupp 11-in. gun, of 35 calibers, for Russian coast service, had, after firing, a permanent bend, varying from 3 mm. to 13 mm. These permanent deviations from the axis, when they attain a certain amount, interfere with the accuracy of fire, and may cause accidents, because the path of the projectile not being a straight line, wedging and bursting may be produced, and in all cases the sighting suffers from increased friction. This question has attracted much attention.

It is not necessary, however, that the gun should be exposed to the action of vibration for flexion to be set up. Guns, especially those made on old-fashioned principles, may bend by their own weight. This may be tested by measurement, and

found to alter on turning the gun round. In firing this is not found to affect the shooting. Hence this temporary flexion must be distinguished from permanent flexion. It is impossible to avoid this temporary flexion altogether, but it should be reduced to a minimum by the adoption of the best form or trace of piece. In the new guns for naval service Canet has a tube without hoops, which has great stiffness, and of which the moment of inertia with respect to the mounting is considerable.

The vibrations have no permanent effect on the chase or tube proper outside the question of dislocation of elements. The molecules retain their natural condition under continued or repeated efforts. Experience, however, teaches that it is generally in the first rounds fired, especially with heavy charges, that inconvenience is caused. A similar phenomenon is seen when a steel projectile, which has been badly tempered, breaks under the single blow of a hammer, or even spontaneously. Now although it is more difficult to temper long tubes evenly than short ones, this is not a sufficient reason to condemn the long ones.

A Canet gun of 57 mm., 80 calibers long, fired at Havre in May, 1892, and a piece of 19 cm. of 80 calibers long, on the same system, tested in September and December, 1892, also at Havre, did not exhibit any deviation in the tube. Projectiles of 2.7 kg. (5.95 lb.) and 13 kg. (28.66 lb.) attained velocities of 1,013 meters (3,323 ft.) and 1,026 meters (3,366 ft.). It has been objected that most of these guns have only fired a limited number of rounds, and that long-continued fire might produce injury; but there is nothing to justify this conclusion in experience up to the present time, but interesting trials, including testing to destruction, will probably soon be made at Gâvre. A gun may be made to bear continued strains as well as a bridge, and should a flaw cause it to yield rapidly, the evil is of a nature which may beset short guns as

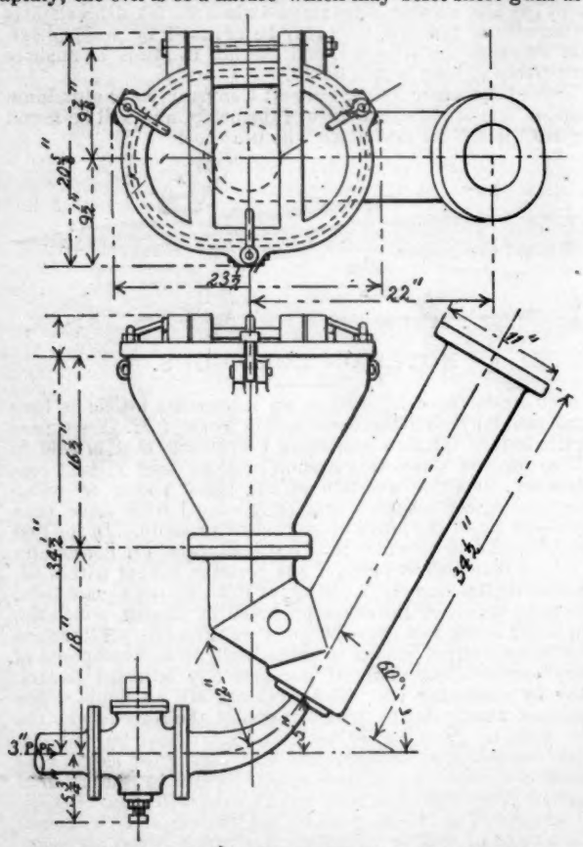

DETAIL OF SEE'S HYDRO-PNEUMATIC ASH EJECTOR.

well as long ones. There is generally too much attention bestowed on resisting transverse strain, and nearly all guns have been constructed on theoretical principles which do not take account of the suddenness of the shock, nor of transverse or of flexional strains.

The new pieces have been constructed on absolutely different principles. A carefully designed form, after practical tests, offers all guarantees for a gun fired under reasonable conditions. The tendency is to increase the length greatly. The Director of Artillery, Colonel Roque, has taken a great step in this important question. He has ordered Canet guns of 55 calibers; and, at last, at Ruelle a 15 cm. (5.9 in.) gun of 90 calibers length has been tried with success. There is every reason to think that the guns of the future will be of great length.

With regard to service on board ship, great length has been thought to constitute a great difficulty. This has weight, no doubt, with regard to some vessels; but it is often possible to replace a 14 cm. gun by one of 10 cm. caliber of such a length as to be equally powerful, and to have a flatter trajectory. Much may be done also by alteration in the mountings and balance of the pieces. The question of length deserves special consideration, offering, as it does, a great increase in velocity and energy, which may be taken advantage of to obtain greater range, a greater zone of destruction, owing to the trajectory being flatter, and greater accuracy of fire.—*Engineer*.

SEE'S HYDRO-PNEUMATIC ASH EJECTOR.

We give herewith two engravings showing the application and construction of a hydro-pneumatic ash ejector, which has recently been designed and put upon the market by Mr. Horace See, of No. 1 Broadway, New York. All ocean travelers are familiar with the disagreeable features which sometimes are present when the ashes are thrown overboard on each watch, especially those who have had occasion to travel on steamers where there was no upper promenade deck. In addition to the disagreeable element which is so annoying to passengers, it, of course, involves an immense amount of work for the crew. The ash ejector which we illustrate does away with all of the manual labor outside of the actual shoveling of the ashes in the fire room, and they are thrown overboard so wet and mixed with such a quantity of water that passengers are not aware that anything of the kind is being done. The construction of the apparatus is exceedingly simple. The dimensions are all given on the drawing which we illustrate.

The apparatus consists of a hopper with a strong cast-iron

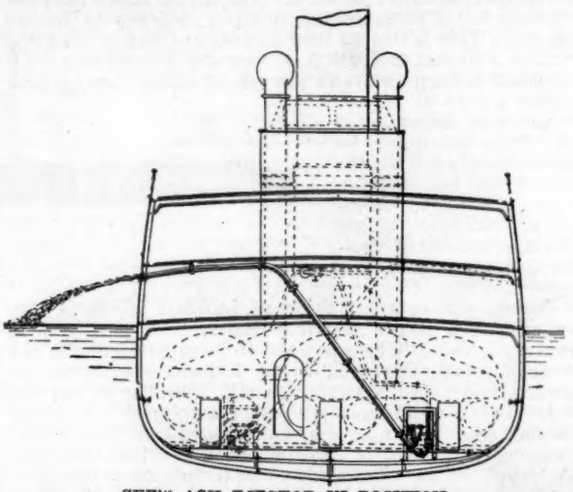

SEE'S ASH EJECTOR IN POSITION.

cover, which when not in use is kept closed. This hopper opens down into a large pipe inclined upward at an angle of about 60°. In the bottom of this pipe there enters the nozzle of the ejector, which throws water under a pressure of about 160 lbs. to the square inch, when the lift, from the fire-room floor to the discharge opening on the side of the steamer, is 20 ft. When the ash ejector is to be used a pressure of 160 lbs. is obtained in the 3-in. pipe back of the plug cock. This is then suddenly opened and the water allowed to pass through the pipe until it is filled and the discharge overboard begins. Then the cover is removed from the hopper and the ashes simply shoveled in. They fall down, are caught by the stream and carried overboard. In order that there may be no clogging it is found necessary to admit some air with the stream of water. This is done by placing an air-valve in the inclined pipe. Sometimes it is placed in the delivery pipe near the top of the hopper, and sometimes at the point marked by a circle in the engraving.

The apparatus has been placed on a number of vessels, and among others on the steamship *Lahn*, of the North German Lloyd Line. On this steamer about 135 tons of coal are burned a day, and the time required for getting rid of the ashes is 15 minutes for each watch. The apparatus, in addition to its simplicity, takes up with all of its connections much less space than any of the old methods. It will raise ashes no matter what the draft of the vessel may be, and as fast as the men can shovel them into the hopper.